EC 125 RACING

DESPIECE / PART LIST

2013

GASGAS

GASGAS
SCHOOL OF
CHAMPIONS
METZELER
RIFFEL
AGOSTO/ AUGUST/ AOÛT/ AGOSTO/ AUGUST 2012

125cc.

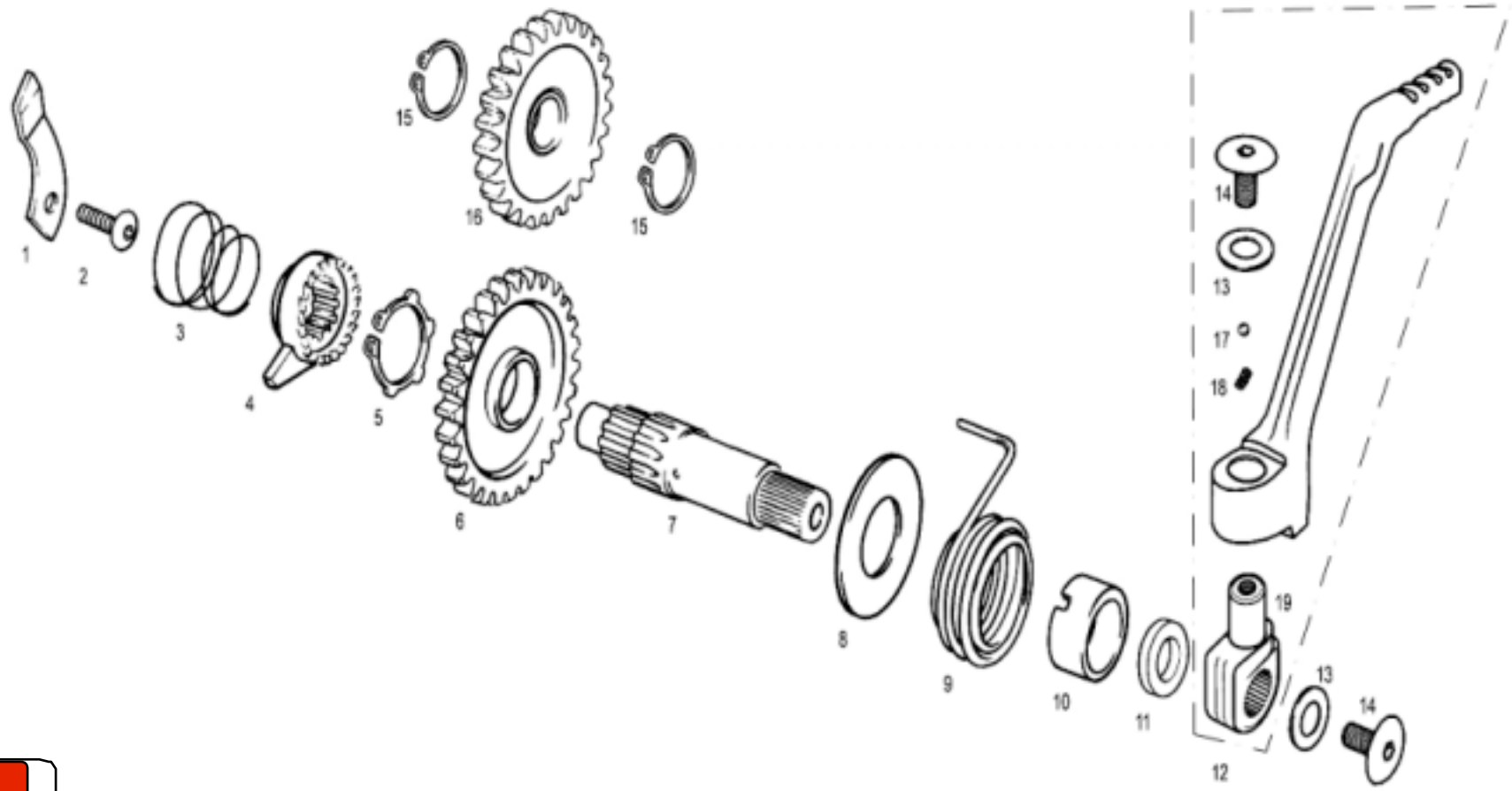

Nº	DESCRIPCION / DESCRIPTION	125	Cant.
1	PLATINA TRINQUETE ARRANQUE / KICKSTART RATCHET BRACKET	ME120136005	1
2	TORNILLO UFK M5X12 / M5X12 UFK BOLT	T0315012	1
3	MUELLE TRINQUETE ARRANQUE / RATCHET PINION SPRING	ME25636006	1
4	TRINQUETE ARRANQUE EC125 / KICKSTART RATCHET PINION	ME120126004	1
5	SEEGER E20 DIN 983 / START SEEGER 20	MT27836052	1
6	PIÑÓN ARRANQUE / STARTING PINION	MT27836002	1
7	EJE ARRANQUE CON AGUJERO EC125 / KICKSTARTER SHAFT	ME120136003	1
8	ARANDELA ARRANQUE 46X18.6X1 / KICKSTART INNER PINION	M02614002	1
9	MUELLE ARRANQUE / KICKSTART SPRING	M02613001	1
10	CASQUILLO CENTRADOR MUELLE ARRANQUE / KICKSTART RATCHET BRACKET	ME250136053	1
11	RETÉN PEDAL ARRANQUE 18x28x7 / 18x28x7 KICKSTART PEDAL SEAL	ME120132021	1
12	CTO. PEDAL ARRANQUE Y MUÑEQUILLA / KICKSTART PEDAL SET	ME120136060	1
13	ARANDELA 6X20X1.5 / WASHER 6X20X1.5	T4006020	2
14	TORNILLO 6X12 CABOTA TORK / TORK SCREW 6X12	T0316012	2
15	SEEGER EJE 15 EMBRAGUE / CLUTCH AXLE SEEGER 15	M02623000	2
16	PIÑÓN INTERIOR ARRANQUE EC125 / KICKSTART INNER PINION	ME120126001	1
17	BOLA MUÑEQUILLA PEDAL ARRANQUE / KICKSTART PEDAL BASE BALL	ME250036062	1
18	MUELLE MUÑEQUILLA PEDAL ARRANQUE / KICKSTART PEDAL BASE SPRING	ME250036066	1
19	MUÑEQUILLA PEDAL ARRANQUE / KICKSTART PEDAL BASE	ME120136061	1

125cc.

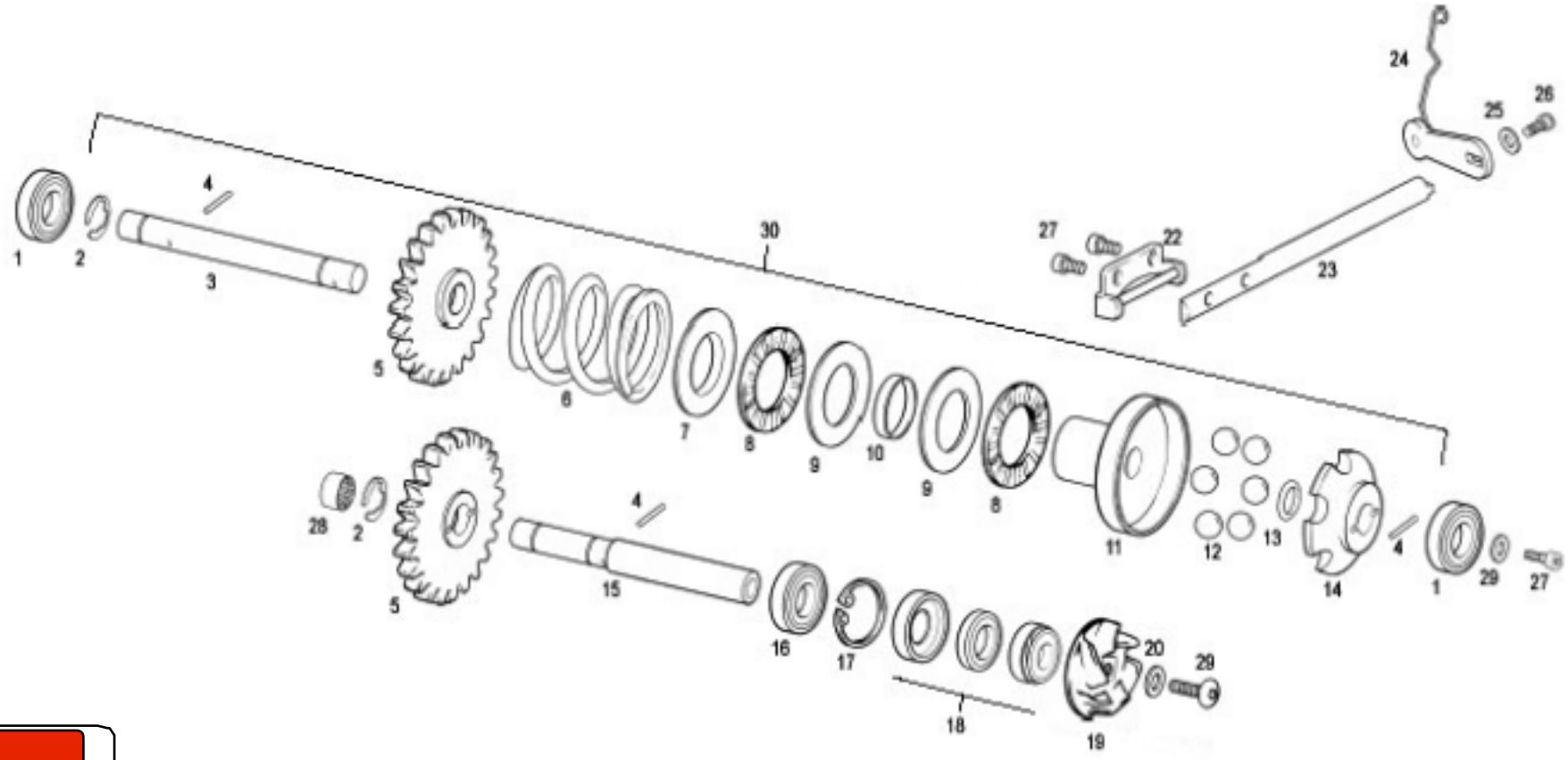

Nº	DESCRIPCION / DESCRIPTION	125	Cant.
1	RODAJE CENTRÍFUGO Y BOMBA 608.Z.C3 / WATER PUMP AXIS BEARING	ME25616032	2
2	SEEGER DIN 6799 E7 / SEEGER DIN 6799 E7	ME25616024	2
3	EJE CENTRÍFUGO EC125 / IMPELLER AXIS	ME120316005	1
4	RODILLO BOMBA AGUA CENTRÍFUGO / IMPELLER WATER PUMP NEEDLE	ME25616028	3
5	PIÑÓN BOMBA AGUA Y CENTRÍFUGO / WATER PUMP PINION	ME580012511	2
6	MUELLE CENTRÍFUGO VÁLVULA ESCAPE / EXHAUST VALVE SPRING	ME590051211	1
7	ARANDELA CENTRAJE MUELLE / IMPELLER SPRING WASHER	ME25616029	1
8	JAULA AGUJA VÁLVULA ESCAPE / EXHAUST VALVE NEEDLES BEARING	ME25632046	2
9	PLACA AGUJA RODAMIENTO BOLET Y VÁLVULA ESCAPE AS 1528 / PLAIN WASHER	ME25632016	2
10	SEPARADOR COJINETE CENTRÍFUGO / SPACER	ME25616008	1
11	CAMPANA CENTRÍFUGA / IMPELLER CAN	ME25616007	1
12	BOLAS CENTRÍFUGO EMBRAGUE DE 8 mm. / IMPELLER BALLS 8MM	ME25616033	6
13	TÓRICA 6X2 EJE CENTRÍFUGO VÁLVULA ESCAPE / O'RING 6X2	ME25616045	1
14	ESTRELLA CENTRÍFUGO 6 BOLAS / 6-BALL RETAINER	ME25916006	1
15	EJE PIÑÓN BOMBA AGUA / WATER PUMP PINION AXIS	ME25610006	1
16	RODAMIENTO BOMBA AGUA / WATER PUMP BEARING	ME25610010	1
17	SEEGER INT.26 BOMBA AGUA / WATER PUMP SEEGER 26	ME25636065	1
18	RETÉN BOMBA AGUA (ESTOPADA) / WATER PUMP SEAL	ME25610011	1
19	TURBINA BOMBA AGUA / WATER PUMP IMPELLER	ME25610007	1
20	ARANDELA 6X12X1,5 / 6X12X1,5 WASHER	T4006012	1
21	TORNILLO ULS 6X16 / ULS BOLT 6X16	T0506016	1
22	PALANCA SALIDA CENTRÍFUGO EC125 / IMPELLER OUTER LEVER	ME120116009	1
23	EJE PALANCA CENTRÍFUGO EC125 / IMPELLER LEVER AXIS	ME120116011	1
24	PALANCA VARILLA EC125 / STICK LEVER SET	ME120116110	1
25	ARANDELA 5X12X1,5 (DIN 125) / WASHER 5X12X1,5	T4005012	1
26	ALLEN 5X15 / 5X15 ALLEN BOLT	T0305015	1
27	ALLEN 4X8 NEGRO / 4X8 BLACK ALLEN BOLT	T0304008	3
28	RODAMIENTO AGUJAS HK0810 / NEEDLES BEARING	MFS400126021	1
29	ARANDELA 4X12X1 / 4X12X1 WASHER	T4004112	1
30	CENTRÍFUGO COMPLETO EC 125 / EC 125 IMPELLER SET	ME59000CT1211	1

125cc.

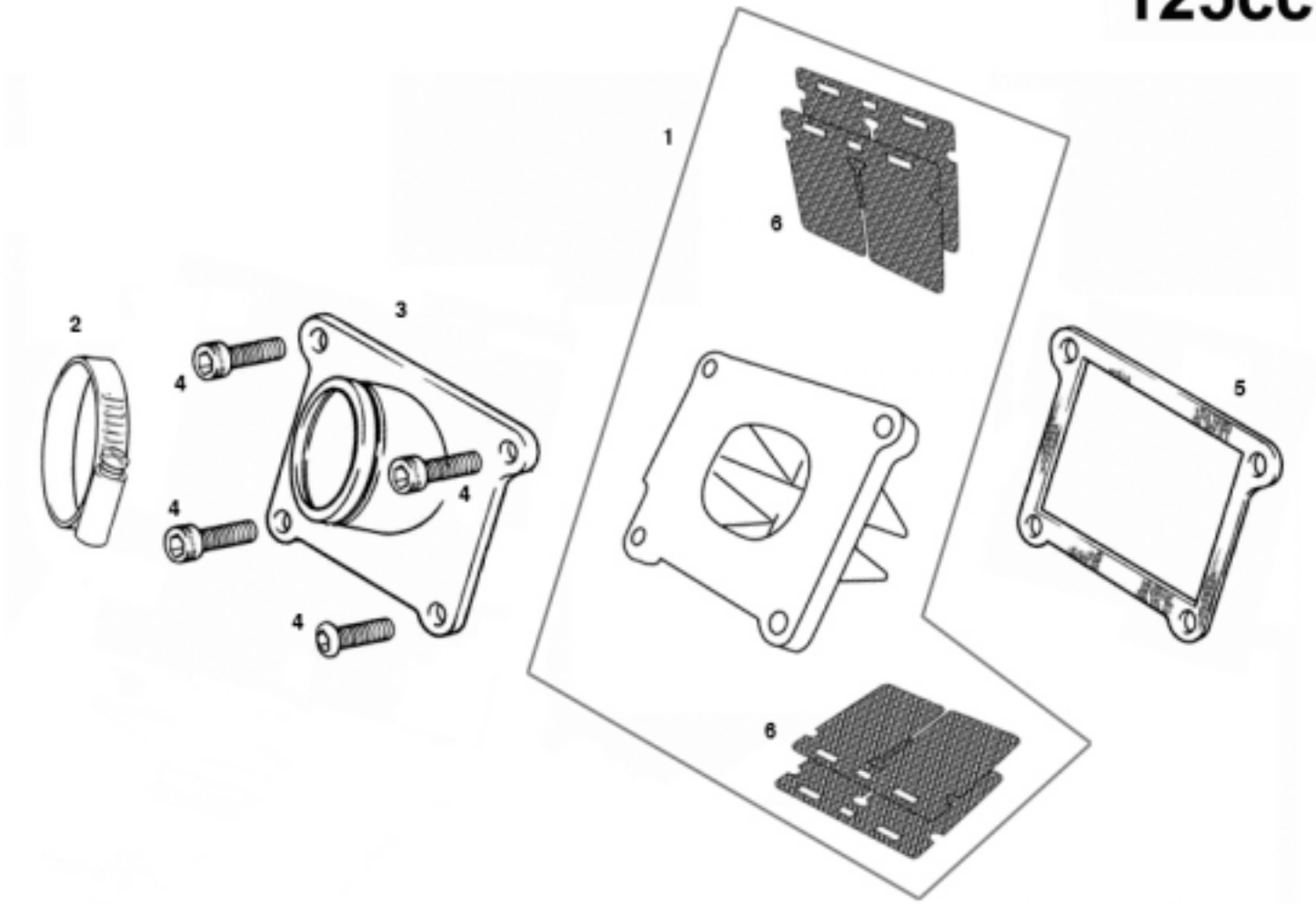

Nº	DESCRIPCION / DESCRIPTION	125	Cant.
1	CTO. CAJA DE LAMINAS / REED VALVE ASSEMBLY	ME120616021	1
2	ABRAZADERA CAJA LÁMINAS / REED VALVE CLAMP	ME120616132	1
3	TUBERA CAJA LÁMINAS / REED VALVE RUBBER	ME120616135	1
4	TORNILLO ESPECIAL 6X20 / SPECIAL BOLT 6X20	T0206020	4
5	JUNTA CAJA LÁMINAS CÁRTER / CRANKCASE REED VALVE GASKET	ME120644005	1
6	JUEGO LÁMINAS ADMISIÓN / REED VALVE SET	ME120616041	2

125cc.

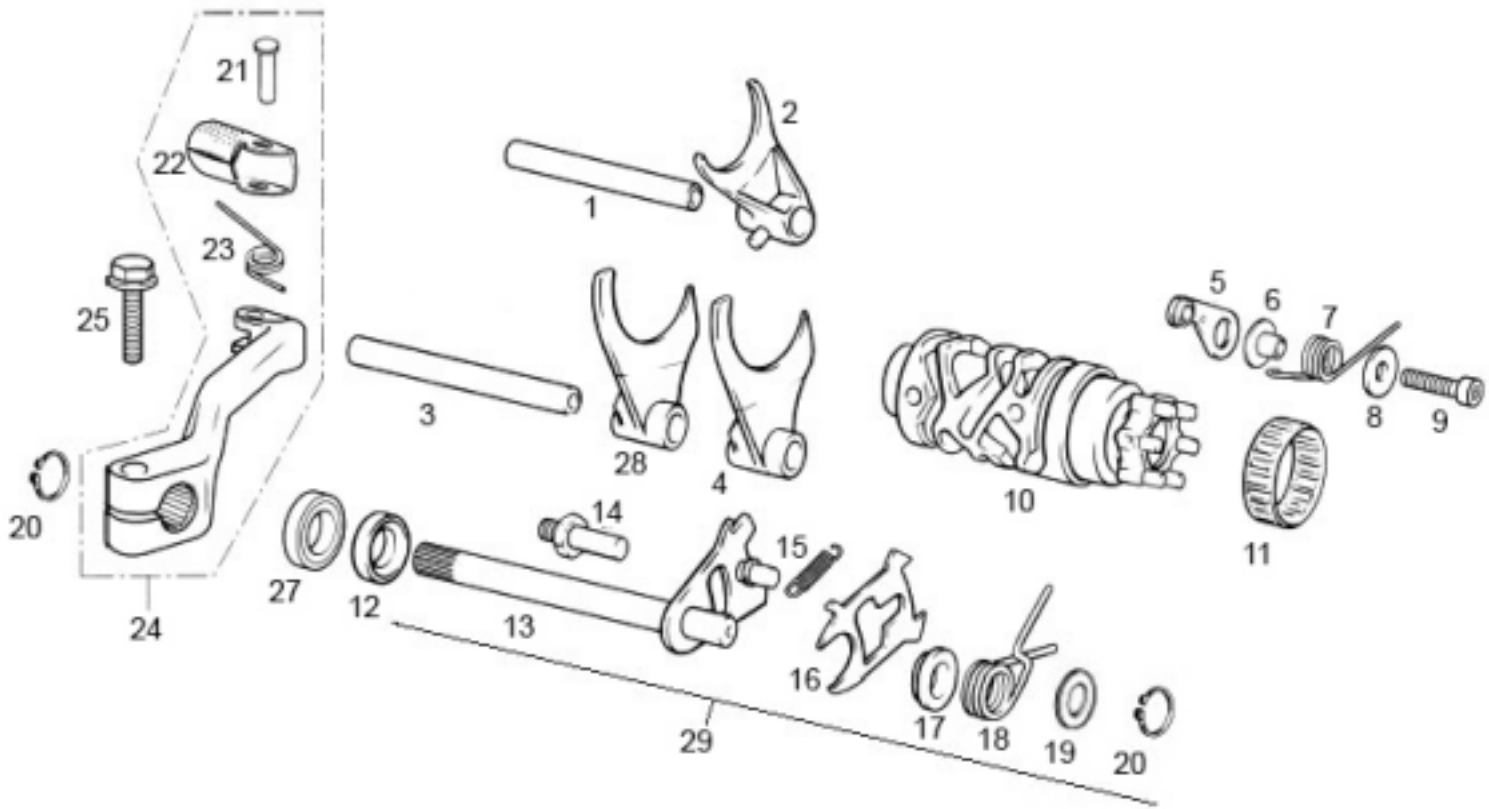

Nº	DESCRIPCION / DESCRIPTION	125	Cant.
1	EJE HORQUILLA CORTO EC125 / SHORT FORK AXIS	ME120136045	1
2	HORQUILLA PRIM. 5-6 / SHIFT FORK 5-6	ME120136009	1
3	EJE HORQUILLA LARGO / LONG FORK AXIS	ME120136044	1
4	HORQUILLA SECUNDARIO 2-3 EC125 / SHIFT FORK 2-3	ME120136008	1
5	FIJADOR MARCHAS EC / GEAR LEVER END	ME250036033CT	1
6	CASQUILLO PLATINA FIJADOR MARCHAS / GEAR BUSHING	ME25636047	1
7	MUELLE FIJADOR MARCHAS EC125 / GEAR FASTEN SPRING	ME120136034	1
8	ARANDELA PLANA 6.5X16X1.5 / PLANE WASHER 6.5X16X1.5	T4006016	1
9	ALLEN 6X25 / ALLEN BOLT 6X25	T0306025	1
10	DESMODRÓMICO EC125 / SHIFT CAM	ME120536031	1
11	RODAMIENTO DESMODRÓMICO HK3512 / HK3512 SHIFT CAM BEARING	ME25636054	1
12	CASQUILLO EJE SELECTOR / AXIS BUSHING	ME250136050	1
14	TORNILLO CENTRADOR MUELLE SELECTOR / SELECTOR SPRING SCREW	ME25636042	1
15	MUELLE ESCORPIÓN / SCORPION SPRING	ME25636039	1
16	ESCORPIÓN / SCORPION	ME250236036	1
17	DOLLA CENTRADOR ESCORPIÓN / SCORPION CENTRER	ME250236041	1
18	MUELLE SELECTOR / SELECTOR SPRING	ME25636035	1
19	ARANDELA 12,10/12,25X22X3 / 12,10/12,25X22X3 WASHER	T4012022	1
20	SEEGER 12X1 / 12X1 SEEGER	ME25636043	2
21	PASADOR PUNTERA PEDAL 6X18 / 6X18 LEVER END PIN	ME25636030	1
22	PUNTERA PEDAL CAMBIO / GEAR LEVER END	ME25636027	1
23	MUELLE PUNTERA PEDAL ARRANQUE / GEAR LEVER END SPRING	ME25636029	1
24	CTO. PEDAL CAMBIO / GEAR LEVEL SET	ME120336026	1
25	HEXAGONAL 6X20 CON ARANDELA / 6X20 HEXAGONAL WITH WASHER	T0206020	1
27	RETÉN SELECTOR / SELECTOR SEAL	ME120136048	1
28	HORQUILLA SECUNDARIO 1-4 / SHIFT FORK 1-4	ME120136108	1
29	EJE SELECTOR EC125 COMPLETO / SELECTOR AXIS COMPLETE	ME120236038CT	1

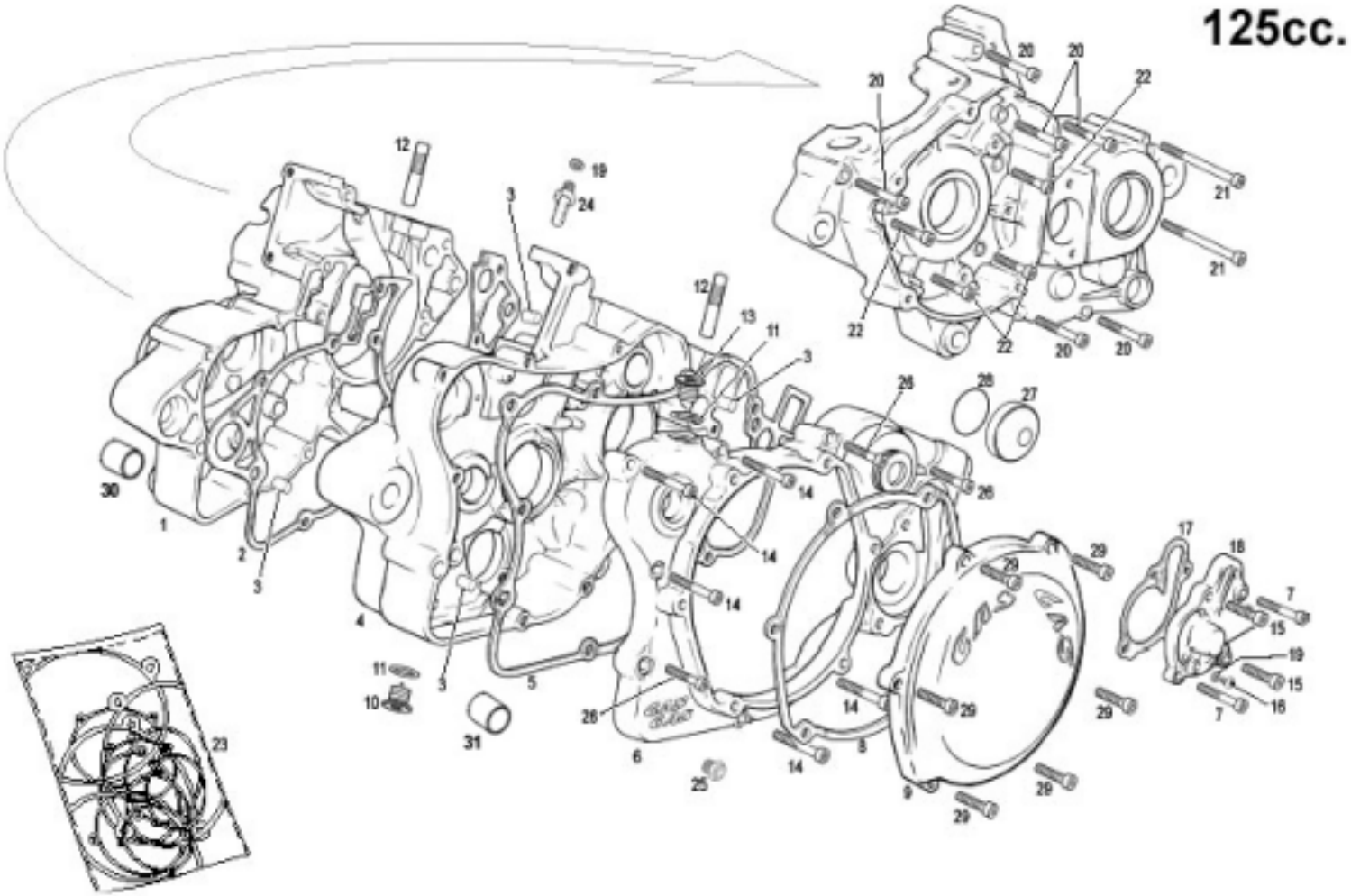
125cc.

Nº	DESCRIPCION / DESCRIPTION	125	Cant.
1	CÁRTER IZQUIERDO EC125 / LEFT CRANKCASE	ME1100001213	1
2	JUNTA CÁRTER CENTRAL EC125 / CENTRAL CRANKCASE GASKET	ME120144001	1
3	CASQUILLO CENTRADOR CÁRTER / CRANKCASE HUSHING	ME25610018	4
4	CÁRTER DERECHO EC125 / RIGHT CRANKCASE	ME1000001213	1
5	JUNTA TAPA EMBRAGUE 0.5MM / CLUTCH COVER GASKET	ME120144002	1
6	TAPA EMBRAGUE EC125 / CLUTCH COVER	ME120332001	1
7	TORNILLO ESPECIAL 6X60 / SPECIAL BOLT 6X60	T0206060	2
8	JUNTA TAPA DISCOS 0.8 / DISCS COVER GASKET 0.8	ME120144003	1
9	TAPA DISCOS EMBRAGUE MAGNESIO / MAGNESIUM DISCS CLUTCH COVER	ME120132002	1
10	TAPÓN VACIADO ACEITE CON IMÁN / MAGNETIC OIL DRAIN PLUG	M01016002	1
11	ARANDELA COBRE 12X18X1,5 / 12X18X1,5 WASHER	MT280410030	2
12	ESPÁRRAGO CILINDRO EC125 M8 / CYLINDER PIN	ME120116023	2
13	TAPÓN LLENADO ACEITE / OIL FILL PLUG	ME25610016	1
14	TORNILLO ESPECIAL 6X35 / SPECIAL BOLT 6X35	T0206035	5
15	TORNILLO ESPECIAL TAPA EMBRAGUE CART. SUP. 6X25 / SPECIAL BOLT 6X25	T0206025	2
16	ULS 6X10 / ULS BOLT 6X10	T0506010	1
17	JUNTA TAPA BOMBA AGUA EC125 / WATER PUMP COVER GASKET	ME120144008	1
18	TAPA BOMBA AGUA EC125 / WATER PUMP COVER	ME120110008	1
19	ARANDELA FIBRA 6X10X1.5 / FIBER WASHER 6X10X1.5	T4006010	2
20	TORNILLO ESPECIAL 6X55 / SPECIAL BOLT 6X55	T0206055	6
21	TORNILLO ESPECIAL 6X70 8.8 CÁRTER / SPECIAL BOLT 6X70	T0206070	2
22	TORNILLO ESPECIAL 6X45 / SPECIAL BOLT 6X45	T0206045	4
23	KIT JUNTAS EC 125 / EC125 GASKET KIT	ME120144100	1
24	DESVAPORIZADOR CÁRTER / CARTER BREATHE	M01032001	1
25	VISOR NIVEL DE ACEITE / OIL LEVEL PLUG	ME25610015	1
26	TORNILLO ESPECIAL 6X40 / SPECIAL BOLT 6X40	T0206040	3
27	TAPÓN CENTRÍFUGO / IMPELLER CAP	ME120332085	1
28	TÓRICA 28X1,78 / 28X1,78 O'RING GASKET	ME120332086	1
29	TORNILLO ESPECIAL 6X20 / SPECIAL BOLT 6X20	T0206020	6

125cc.

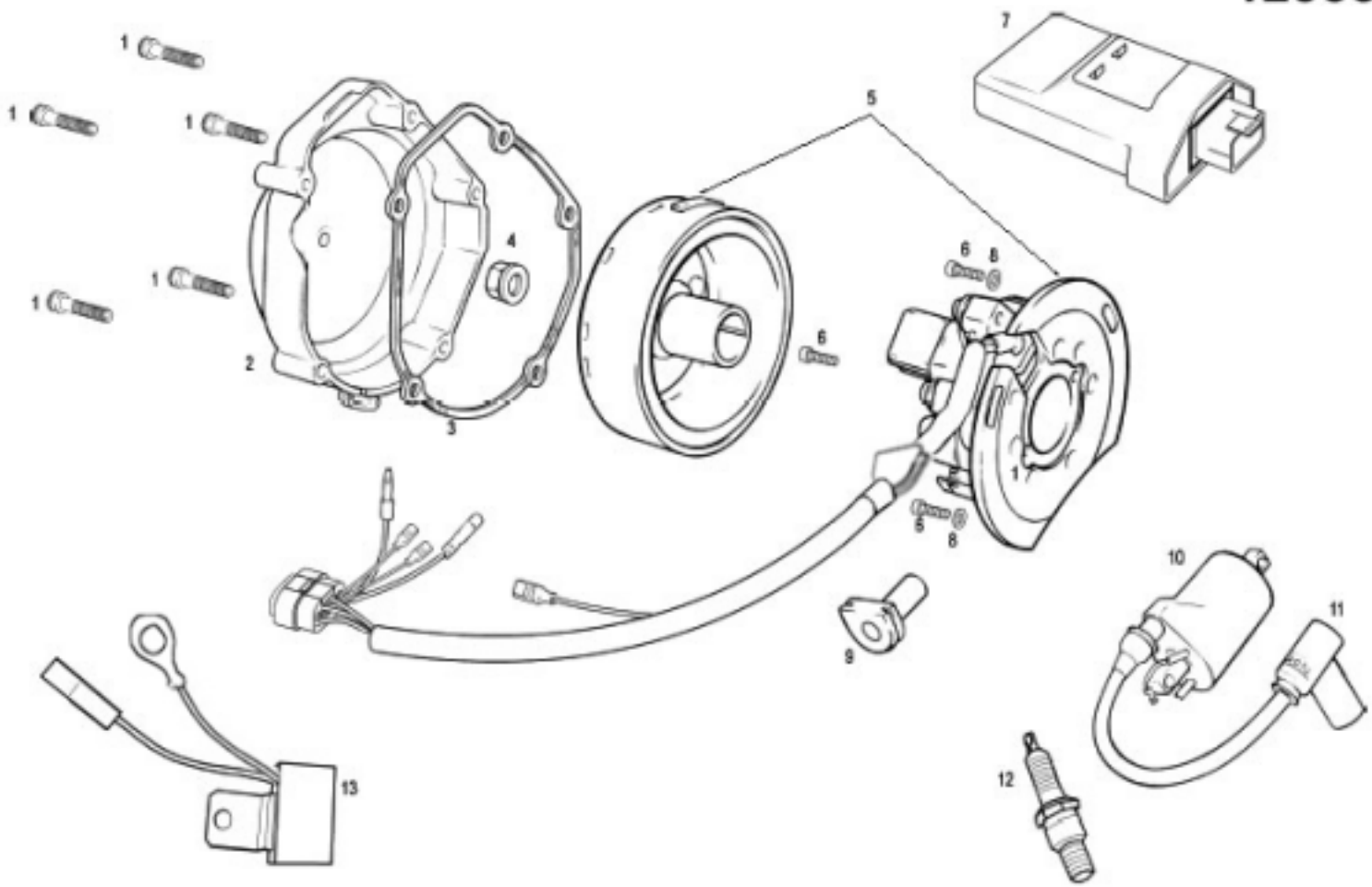

Nº	DESCRIPCION / DESCRIPTION	125	Cant.
1	TORNILLO ESPECIAL 6X40 / SPECIAL BOLT 6X40	T0206040	5
2	TAPA ENCENDIDO PLÁSTICO EC125-2001 / PLASTIC IGNITION COVER	ME120110004	1
3	JUNTA TAPA VOLANTE EC125-2001 / IGNITION COVER GASKET	ME120144004	1
4	TUERCA CON ARANDELA / NUT WITH WASHER	MFS400134011	1
5	VOLANTE MAGNÉTICO KOKUSAN MULTISPARK FP8049 / IGNITION COMP.	MC250534005	1
6	ALLEN 5X20 / ALLEN BOLT 5X20	T0305020	3
7	CDI / CDI	EE511001213CT	1
8	ARANDELA PLANA 5X12X1.5 (DIN 125) / PLAIN WASHER 5X12X1.5	T4005012	3
9	TAPÓN GOMA ENCENDIDO / IGNITION RUBBER CAP	ME25934014	1
10	BOBINA / IGNITION COIL	ME250434006	1
11	PIPA BUJÍA / SPARK PLUG CAP	ME25934000	1
12	BUJÍA BPR9 / SPARK PLUG	ME25934000	1
13	REGULADOR ALTERNADOR / ALTERNATOR REGULATOR	EE512003013	1
	Solo Motocross MC / Only Motocross MC bike		
5	VOLANTE MAGNÉTICO KOKUSAN FP8188 / FP8188 IGNITION COMP.	MC250534005	1
7	CDI KOKUSAN CROSS / KOKUSAN CDI CROSS	EE511001213CT	1

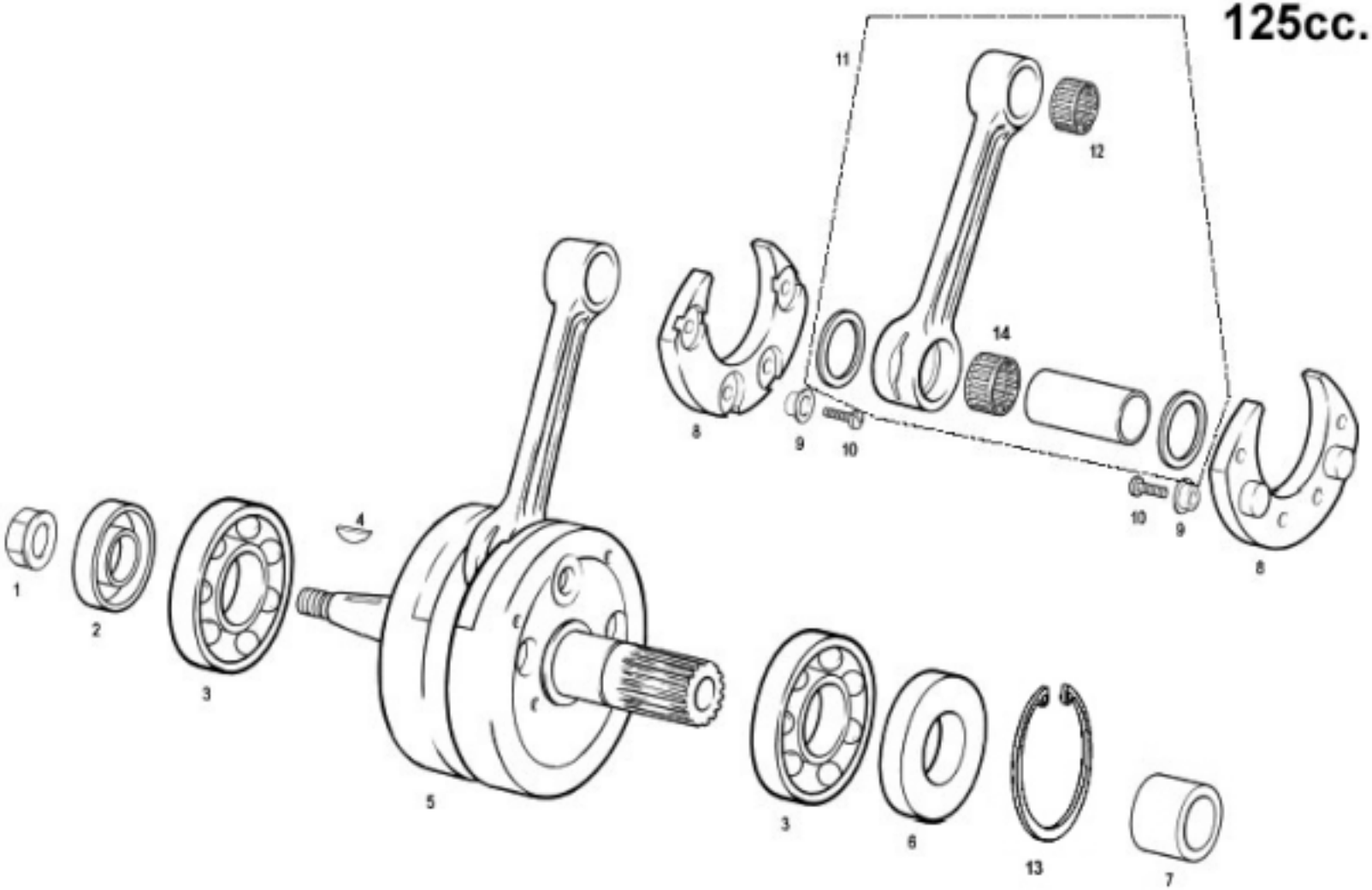
125cc.
1
2
3
4
5
3
6
13
7
8
9
10
11
12
14
10
9
8

Nº	DESCRIPCION / DESCRIPTION	125	Cant.
1	TUERCA VOLANTE CON ARANDELA / IGNITION NUT	MFS400134011	1
2	RETÉN LADO IZQ. CIG. TCJ 20X35X6/6,5 / LEFT SIDE CRANK SHAFT SEAL	ME250112009	1
3	RODAMIENTO CIGÜEÑAL 125CC 63/22C / CRANKSHAFT BEARING	ME120112006R	2
4	CHAVETA VOLANTE = MO1224001 / IGNITION KEY	ME25634016	1
5	CTO. CIGÜEÑAL EC 125-2001 / CRANKSHAFT ASSEMBLY	ME30000CT1209	1
6	RETÉN LADO DERECHO CIG. / RIGHT SIDE CRANK SHAFT SEAL	ME120112008	1
7	CASQUILLLO CIGÜEÑAL TRANS. PRIMARIO / CRANKSHAFT BUSHING	ME120112014	1
8	NYLON CONTRAPESO / COUNTERWEIGHT NYLON	ME120112021	2
9	CASQUILLO NYLON CONTRAPESO / COUNTER WEIGHT NYLON BUSHING	ME120112011	8
10	TORNILLO ULS 6x16 / 6X16 ULS BOLT	T0506016N	2
11	CTO. BIELA / ROD. SET	ME320001209	1
12	RODAMIENTO 15X19X17,3 PIE BIELA / ROD BEARING	ME320501213	1

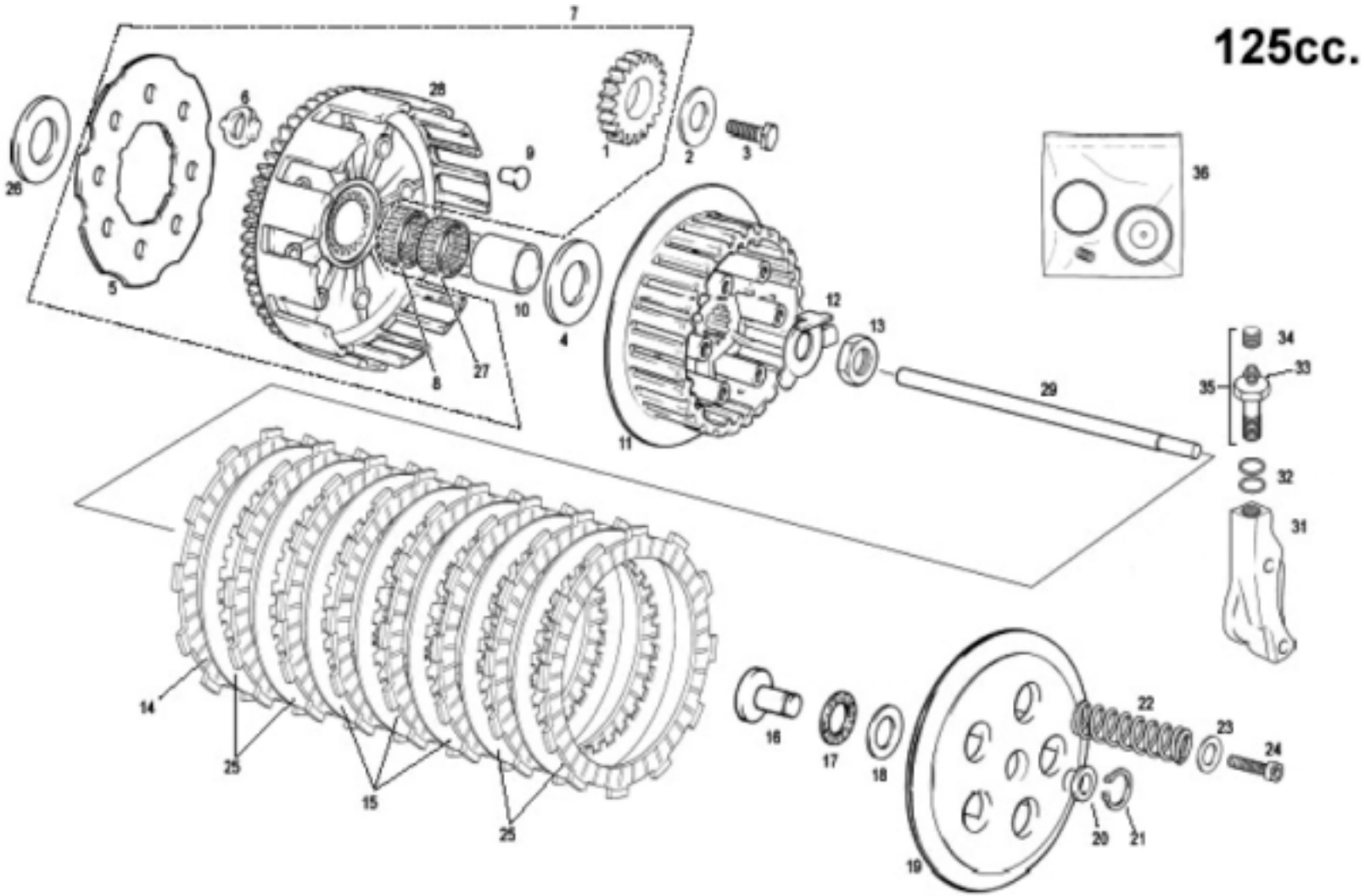
125cc.
7
26
6
28
9
1
2
3
36
5
10
4
12
13
34
33
35
29
8
27
11
32
31
14
25
15
25
16
17
18
22
23
24
20
21
19

Nº	DESCRIPCION / DESCRIPTION	125	Cant.
1	PIÑÓN CIGÜEÑAL TRANS.PRIM. / PR. TRANSMISION CRANK SHAFT PINION	ME120112004	1
2	ARANDELA 10X28X4 / 10X28X4 WASHER	T4001028	1
3	TORNILLO M10X25/150 12.9 / M10X25/150 12.9 BOLT	T0101025/2	1
4	ARANDELA CAMBIO / SHIFT WASHER	ME120136101	1
5	ARANDELA CORONA EMBRAGUE / CLUTCH BOSS WASHER	ME120132009	1
6	GOMA SILENTBLOCK / SILENTBLOCK RUBBER	ME120132008	8
7	CTO. CORONA CAMPANA EMBRAGUE / PRIMARY DRIVEN GEAR SET	ME120132000	1
8	COJINETE CAMPANA EMBRAGUE / PRIMARY DRIVEN GEAR BEARING	ME120132031	1
9	REMACHE CAMPANA 22103-KS6-300 / PRIMARY DRIVEN GEAR RIVETS	ME120132010	8
10	CASQUILLO CAMPANA EMBRAGUE / PRIMARY DRIVEN GEAR BUSHING	ME120132012	1
11	CUBO EMBRAGUE 22120-KZ4-A90 EC2001 / CLUTCH BOSS	ME120132005	1
12	PRECINTO EMBRAGUE / CLUTCH LOCK	ME120132022	1
13	TUERCA FIJACIÓN CUBO EMBRAGE / CLUTCH BISS NUT	ME120132028	1
14	DISCO EMBRAGUE FORRADO 22201-KS6-700 / COVERED CLUTCH DISK	ME120132007	8
15	DISCO EMBRAGUE HIERRO 272M9 / IRON CLUTCH DISK	ME120132037	3
16	EMPUJADOR EMBRAGUE / CLUTCH PIN	ME120132014	1
17	RODAMIENTO AXIAL EMPUJADOR EMBRAGUE / AXIAL BEARING CLUTCH PIN	ME120132042	1
18	ARANDELA EMPUJADOR EMBRAGUE / CLUTCH PIN WASHER	ME120132041	1
19	PREMSA EMBRAGUE / PRESSURE PLATE	ME120132006	1
20	CASQUILLO EMPUJADOR EMBRAGUE / CLUTCH PIN BUSHING	ME120132044	1
21	SEEGER EJE 15 EMBRAGUE / CLUTCH SEEGER AXLE 15	ME25632017	1
22	MUELLE EMBRAGUE 39.5X18X2.3X5 PAS EC125-2001 / CLUTCH SPRING	ME120132015	5
23	ARANDELA 6X18X1,5 / 6X18X1,5 WASHER	T4006018	5
24	ALLEN 6X20 12.9 / ALLEN BOLT 6X20 12.9	T0306020	5
25	DISCO EMBRAGUE ALUMÍNIO / ALUMINIUM CLUTCH DISK	ME120132038	4
26	ARANDELA EMBRAGUE 20,15X38X3,25 / 20,15X38X3,25 CLUTCH WASHER	M03226000	1
27	COJINETE CAMPANA EMBRAGUE K25X29X10 / PRIMARY BEARING	M02616000	1
28	CAMPANA EMBRAGUE / DRIVEN GEAR	ME120132004	1
29	VARILLA EMBRAGUE / CLUTCH ROD.	ME120132040	1
31	PINZA EMBRAGUE HIDRÁULICO / HYDRAULIC CLUTCH CALIPER	ME120132026	1
32	ARANDELA LATIGUILLO / HOSE WASHER	BE25622007	2
33	SANGRADOR / BLEEDER	BE25622060	1
34	TAPÓN SANGRADO / BLEEDER CAP	BT27922055	1
35	RACORD PINZA EMBRAGUE / RACORD CLUTCH CALIPER	MO1060000	1
36	KIT REPARACIÓN PINZA EMBRAGUE / CLUTCH CALIPER REPARATION KIT	BE120522050	1

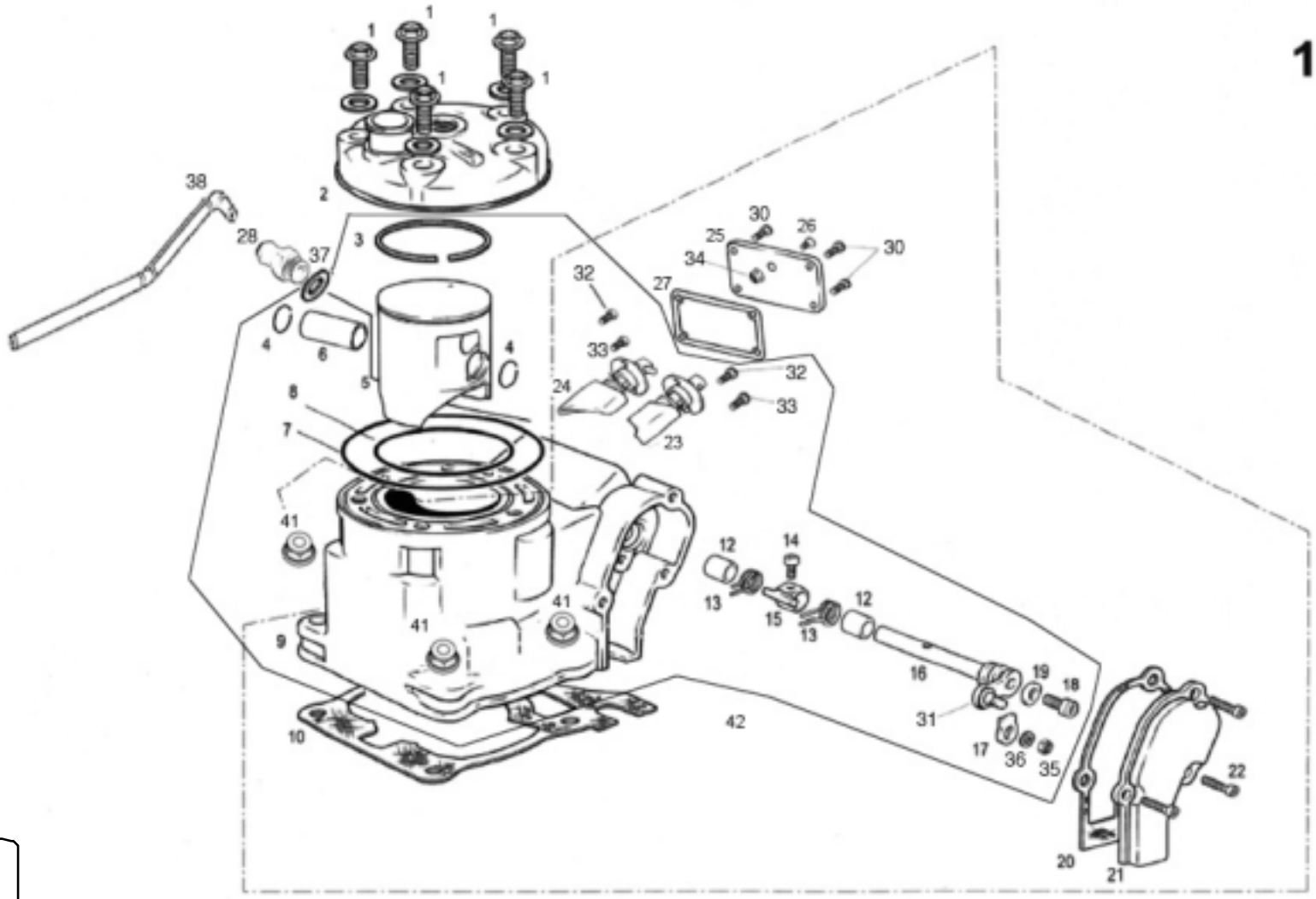
125cc.
1
2
3
4
5
6
7
8
9
10
12
13
14
15
16
17
18
19
20
21
22
23
24
25
26
27
28
30
31
32
33
34
35
36
37
38
41
42

Nº	DESCRIPCION / DESCRIPTION	125	Cant.
1	TORNILLO CULATA ULS 8x35	T0508035	5
2	CULATA TT125CC / 125 CYLINDER HEAD	ME750001213	1
3	ARO PISTÓN 0,8 / PISTON RING	ME710201213	1
4	CLIP BULÓN / PISTON PIN DIPS	ME710301213	2
5A	PISTÓN A / PISTON	ME710001213	1
5B	PISTÓN B / PISTON	ME710011213	1
5C	PISTÓN C / PISTON	ME710021213	1
6	BULÓN PISTÓN / PISTON PIN	ME710401213	1
7	TÓRICA CULATA EXT. / OUTER CYLINDER HAED O'RING	ME755151213	1
8	TÓRICA CULATA INT. VITON / INNER CYLINDER HEAD O'RING	ME755101213	1
9	CILINDRO 125 ENDURO / 125 ENDURO CYLINDER	ME700001213	1
10	JUNTA CILINDRO EC125 0.5 / CYLINDER GASKET 0,5	ME942001213	1
10A	JUNTA CILINDRO 0,3 / CYLINDER GASKET 0,3	ME120144009	1
10B	JUNTA CILINDRO 0,15 / CYLINDER GASKET 0,15	ME120144010	1
11	TUERCA CILINDRO M8 DC08FN1 / CYLINDER NUT	ME120116031	2
12	CASQUILLO EJE VÁLVULA ESCAPE / EXHAUST VALVE AXLE BUSHING	ME723051213	2
13	MUELLE EJE VÁLVULA ESCAPE / EXHAUST VALVE AXLE SPRING	ME710851213	2
14	ALLEN ESPECIAL 4X8 / SPECIAL 4X8 ALLEN SCREW	T0304008	1
15	PALANCA MUELLE VÁLVULA / LEVER VALVE SPRING	ME710401213	1
16	EJE VÁLVULA ESCAPE CILINDRO EC125 / EXHAUST VALVE AXIS	ME723001213	1
17	PLANCHA FIJACIÓN EJE VÁLVULA / EXHAUST AXLE VALVE PLATE	ME710951213	1
18	ALLEN 5X10 / ALLEN BOLT 5X10	T0305010	1
19	ARANDELA 5X12X1,5 / 5X12X1,5 WASHER	T4005012	1
20	JUNTA TAPA VÁLV. DRCHO. 1MM / RIGHT VALVE COVER GASKET 1MM	ME946501213	1
21	TAPA VÁLVULA DRCHA. EC125 / RIGHT VALVE COVER	ME720201213	1
22	ALLEN 5X12 / ALLEN BOLT 5X12	T0305012	3
23	VÁLVULA ESCAPE DERECHA / LEFT EXHAUST VALVE	ME720001213	1
24	VÁLVULA ESCAPE IZQUIERDA / RIGHT EXHAUST VALVE	ME720101213	1
25	TAPA VÁLVULA CENTRAL / CENTRAL VALVE COVER	ME720401213	1
26	ALLEN CÓNICO M6X10 / M6X10 CONIC ALLEN	T0406010	1

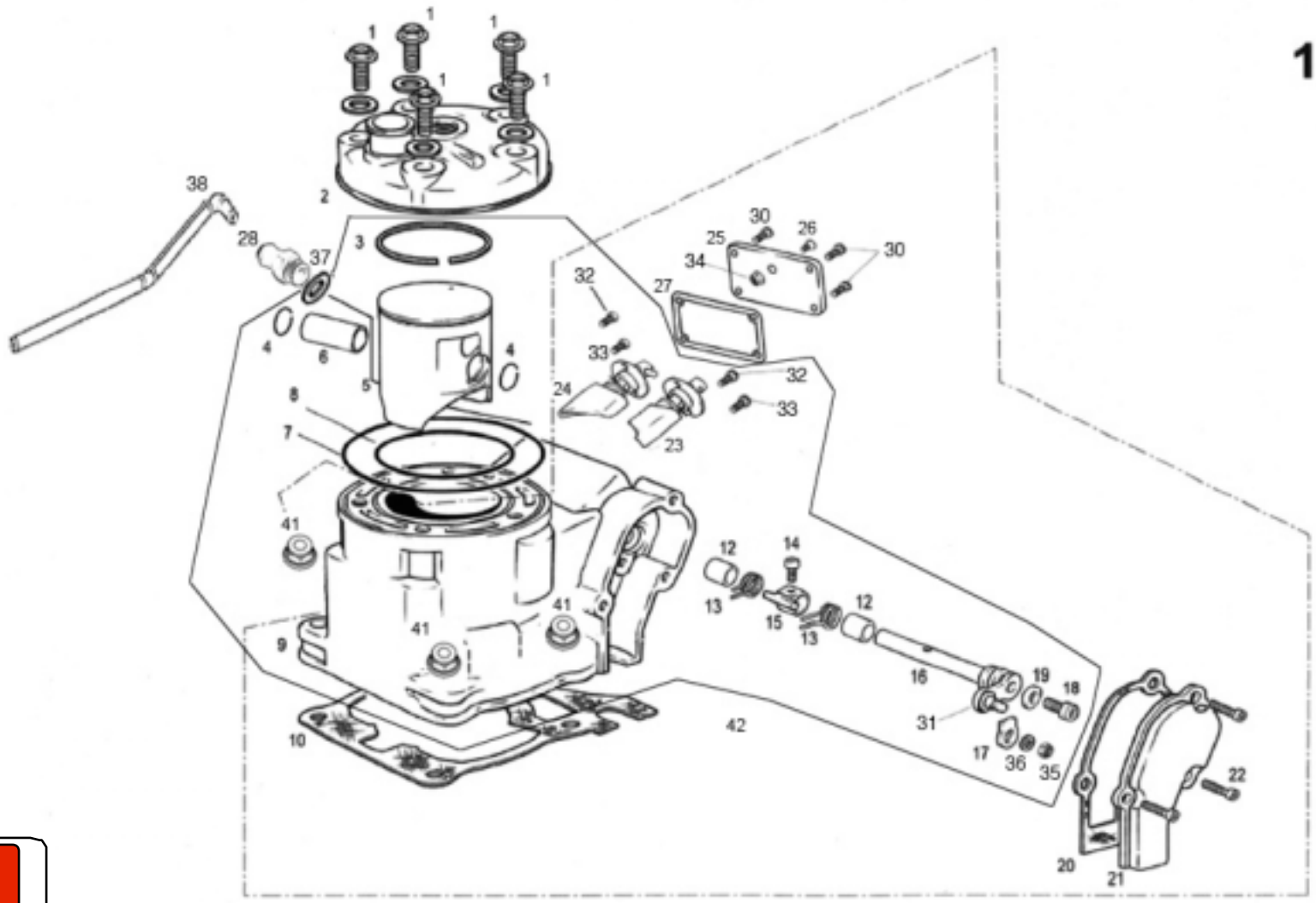
125cc.
1
2
3
4
5
6
7
8
9
10
12
13
14
15
16
17
18
19
20
21
22
23
24
25
26
27
28
30
31
32
33
34
35
36
37
38
41
42

Nº	DESCRIPCION / DESCRIPTION	125	Cant.
27	JUNTA VÁLVULA CENTRAL / CENTRAL VALVE GASKE	ME946001213	1
28	RACORD /RACORD	ME721001209	1
29	ARANDELA COBRE 8X16X1,5 / 8X16X1,5 WASHER	T4008516	5
30	TORNILLO ULS 5X10 / 5X10 ULS BOLT	T0505010	4
31	PALANCA VÁLVULA ESCAPE EC125 / EXHAUST VALVE LEVER	ME120116050	1
32	ALLEN 5x12 / 5X12 ALLEN BOLT	T0305012	2
33	TORNILLO UFK M5x12 / UFK 5X12 BOLT	T0315012	1
34	TUERCA CON ARANDELA ESTRIADA M6 / M6 NUT WITH WASHER	T2206000	1
35	TUERCA AUTOBL. M5 / SELF-LOCKING NUT M5	T2105001	1
36	ARANDELA 5X12X1.5 / WASHER 5X12X1.5	T4005012	1
37	ARANDELA RACORD / WASHER	BE25622007	1
38	TUBO VALVULA / VALVE TUBE	BE733001209	1
39	TUERCA CILINDRO 8.8 ESP.10/150 C13= ME25616031	M01613001	4
40	CONJUNTO CILINDRO EC 125 , 08 / CYLINDER SET EC 125 , 08	ME700001213CT	1

125cc.

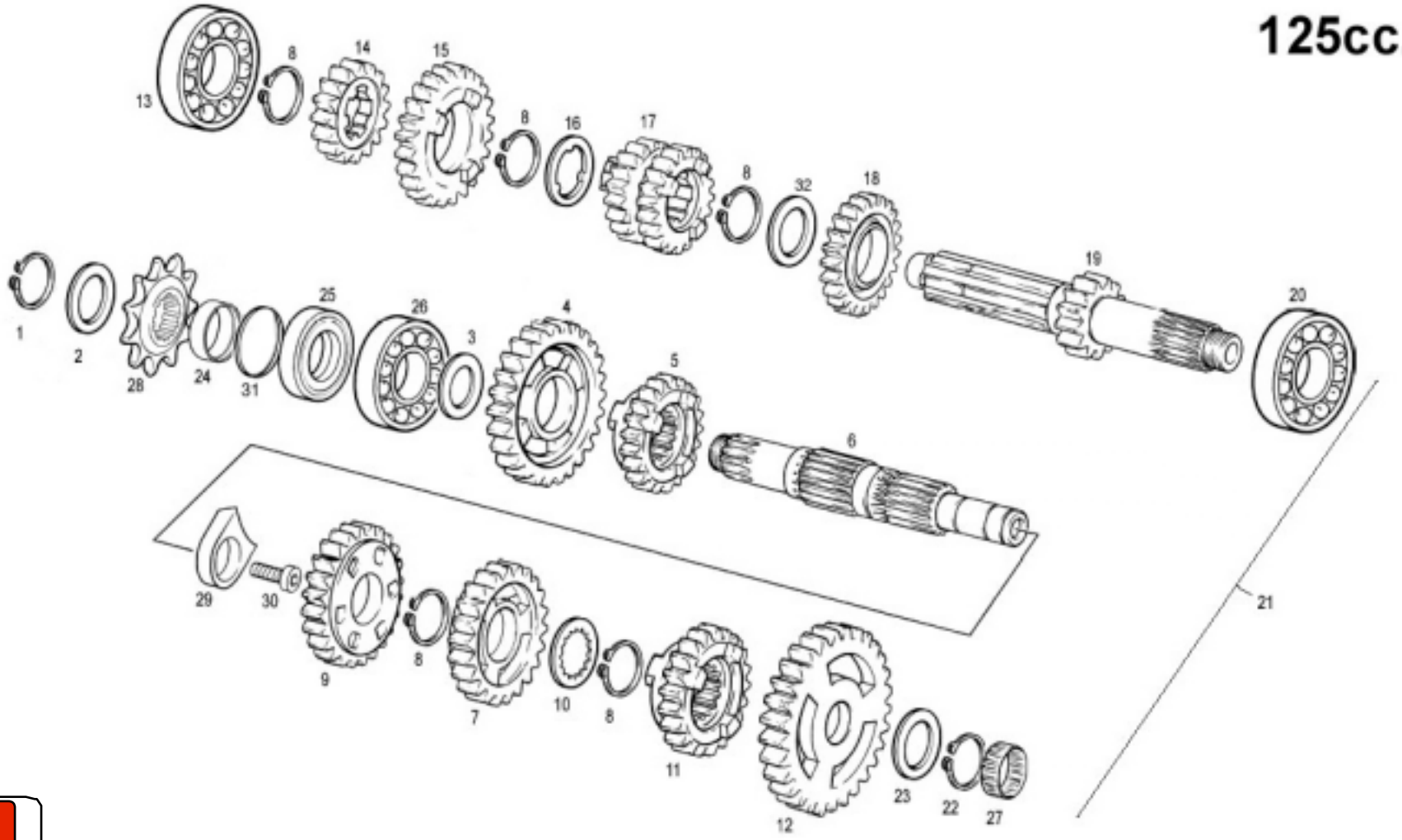
13
8
14
15
8
16
17
8
32
18
19
20
1
2
28
24
31
25
26
3
4
5
6
21
29
30
9
8
7
10
8
11
12
23
22
27

Nº	DESCRIPCION / DESCRIPTION	125	Cant.
1	CIRCLIP AK-20 PARA EJE DIN983 / CIRCLIP AK-20 FOR SHAFT DIN983	MT27836052	1
2	ARANDELA 28x20x2x3 / WASHER 28x20x2x3	T90202280003B	1
3	ARANDELA CAMBIO 2MM. / 2MM. SHIFT WASHER	ME120136101	1
4	PIÑÓN SECUNDARIO II 2MM. / SECONDARY GEAR II Z-33	ME425461212	1
5	PIÑÓN SECUNDARIO VI / SECONDARY GEAR VI Z-24	ME425661212	1
6	EJE SECUNDARIO / SECONDARY AXIS	ME410001212	1
7	PIÑÓN SECUNDARIO IV / SECONDARY GEAR IV Z-29	ME425561212	1
8	CIRCLIP D.22 DIN 471 / CIRCLIP DIN 471	MT280236166	5
9	PIÑÓN SECUNDARIO III / SECONDARY GEAR III Z-30	ME425511212	1
10	ARANDELA A22X19,5 DIN7480 / A22X19,5 DIN7480 WASHER	ME120136091	1
11	PIÑÓN SECUNDARIO V / SECONDARY GEAR V Z-26	ME425611212	1
12	PIÑÓN SECUNDARIO I / SECONDARY GEAR I Z-36	ME425411212	1
13	RODAMIENTO CAMBIO 6202C3 / SHIFT BEARING	ME120136057	1
14	PIÑÓN PRIMARIO II / PRIMARY GEAR II Z-17	ME425101212	1
15	PIÑÓN PRIMARIO VI / PRIMARY GEAR VI Z-25	ME425251212	1
16	ARANDELA ESTRIADA 3 PUNTAS 18,25X22,15X0,5 / 18,25X22,15X0,5 WASHER	ME120136100	1
17	PIÑÓN PRIMARIO III Y IV / PRIMARY GEAR III AND IV Z-22/Z-19	ME425151212	1
18	PIÑÓN PRIMARIO V / PRIMARY GEAR V Z-23	ME425201212	1
19	EJE PRIMARIO / PRIMARY AXIS	ME410101212	1
20	RODAMIENTO CAMBIO 6204ZC4 / SHIFT BEARING	ME120136056	1
21	CTO. GRUPO CAMBIO COMPLETO EC125-2001 / SHIFT GEAR SET	ME40000CT1212	1
22	CIRCLIP D15 DIN471 / D15 DIN471 CIRCLIP	ME25632017	1
23	ARANDELA 15,2 x 23 x 0,5 / 15,2 x 23 x 0,5 WASHER	T4001523	1
24	CASQUILLO PIÑON SALIDA / FRONT SPROCKET BUSH	ME120136046	1
25	RETÉN 28X38X7 / FRONT SPROCKET SEAL	ME120136024	1
26	RODAMIENTO 6304C3 / 6304C3 BEARING	ME120136058	1
27	RODAMIENTO TR15X25X12 / TR15X25X12 BEARING	ME120136157	1
28	PIÑÓN SALIDA T13 / FRONT SPROCKET	ME120136025	1
28A	PIÑÓN SALIDA T12	ME120736025	1
29	FIJADOR COJINETE SALIDA CAMBIO / SHIFT OUTER BEARING HOLDER	ME120336104	1
30	TORNILLO UFK M5X12 / UFK SCREW M5X12	T0315012	1
31	JUNTA TÓRICA 20x25x2 / ORING 20x25x2	OR-2025-2	1

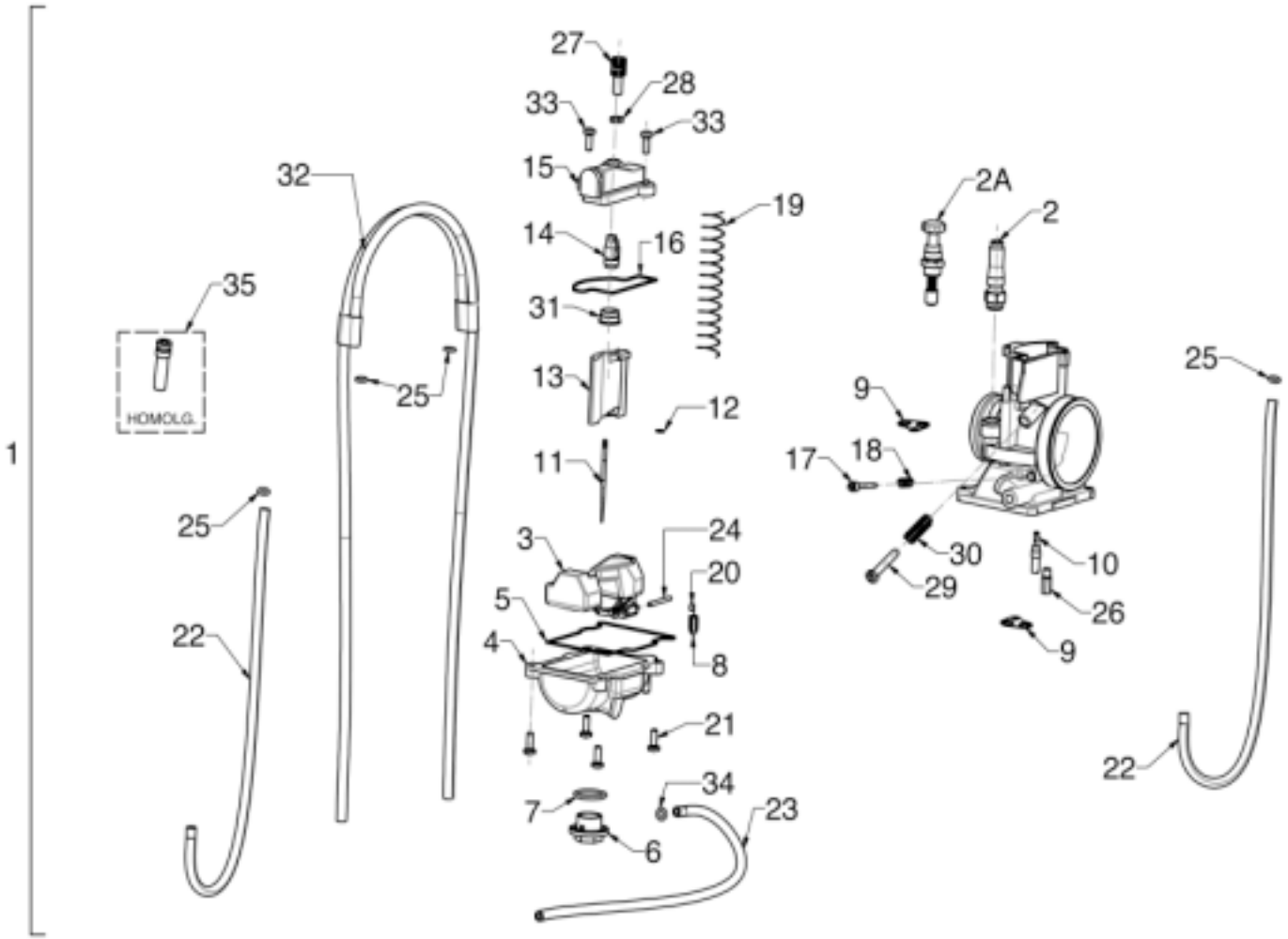
27
28
33
33
15
32
2A
2
19
14
16
35
31
HOMOLG.
25
13
12
9
25
1
11
17
18
25
24
3
30
10
20
29
5
26
22
4
8
9
21
22
34
7
23
6

Nº	DESCRIPCION / DESCRIPTION	125	Cant.
1	CARBURADOR KEIHIN / KEIHIN CARBURETOR	BE780002508	1
2	PERILLA AHOGADORA / PROTECTOR STARTER	ME25000173012	1
2A	MANDO ESTARTER / COLD STARTER KNOB SET	ME25690011	1
3	BOYA FLOTADOR / FLOAT	ME25000183012	1
4	CUBETA FLOTADOR / FLOAT BODY	ME25000193012	1
5	JUNTA CUBETA FLOTADOR / FLOAT BODY GASKET	ME25000203012	1
6	TAPÓN CUBETA / FLOAT BODY DRAIN CAP	ME25690015	1
7	TÓRICA TAPÓN CUBETA / DRAIN CAP O'RING	ME25690016	1
8	AGUJA FLOTADOR / FLOAT NEEDLE	ME25000213012	1
9	SUJECIÓN TUBO RESPIRADERO / AIR HOSE HOLDER	ME25000223012	1
10	CHICLÉ RALENTÍ 35 / SLOW JET 35	ME25690035	1
10A	CHICLÉ RALENTÍ 42 / SLOW JET 42	ME25690042	1
11	AGUJA N1 EF / N1 EF NEEDLE	ME250190429	1
11A	AGUJA N1 EE / N1 EE NEEDLE	ME250290427	1
11B	AGUJA N1 EG / N1 EG NEEDLE	ME250290428	1
12	CLIP AGUJA / NEEDLE CLIP	ME25690021	1
13	COMPUERTA Nº 7 / THROTTLE VALVE Nº 7	ME25000233012	1
14	FIJADOR AGUJA-CABLE / NEEDLE HOLDER	ME25690023	1
15	TAPA SUPERIOR CARBURADOR / CARBURETOR COVER	ME25000243012	1
16	JUNTA TAPA CARBURADOR / CARBURETOR COVER GASKET	ME25000253012	1
17	TORNILLO REGULADOR AIRE / AIR REGULATOR SCREW	ME25000263012	1
18	MUELLE REGULADOR AIRE / AIR REGULATOR SPRING	ME25000273012	1
19	MUELLE COMPUERTA / CARBURETOR COVER SPRING	ME25000283012	1
20	CLIP NIVEL FLOTADOR / FLOAT CLIP	ME25690027	1
21	TORNILLO CUBETA / FLOAT BODY BOLT	ME25000293012	4
22	TUBO RESPIRADERO / AIR HOSE	ME25000303012	2
23	TUBO RESPIRADERO 2 / AIR HOSE 2	ME25000313012	1
24	EJE FLOTADOR / FLOAT AXLE	ME25690033	1
25	CLIP / CLIP	ME25690034	4
26	CHICLÉ ALTA 175 / MAIN JET 175	ME25690175	1
27	TENSOR CABLE / CABLE TENSOR	ME25000323012	1
28	TUERCA TENSOR CABLE / CABLE TENSOR NUT	ME25000333012	1
29	TORNILLO REGULADOR RALEN. / SLOW JET ADJUSTING BOLT	ME25690038	1
30	MUELLE TORN. REGULADOR RALENTI / ADJUSTING BOLT SPRING	ME25690039	1

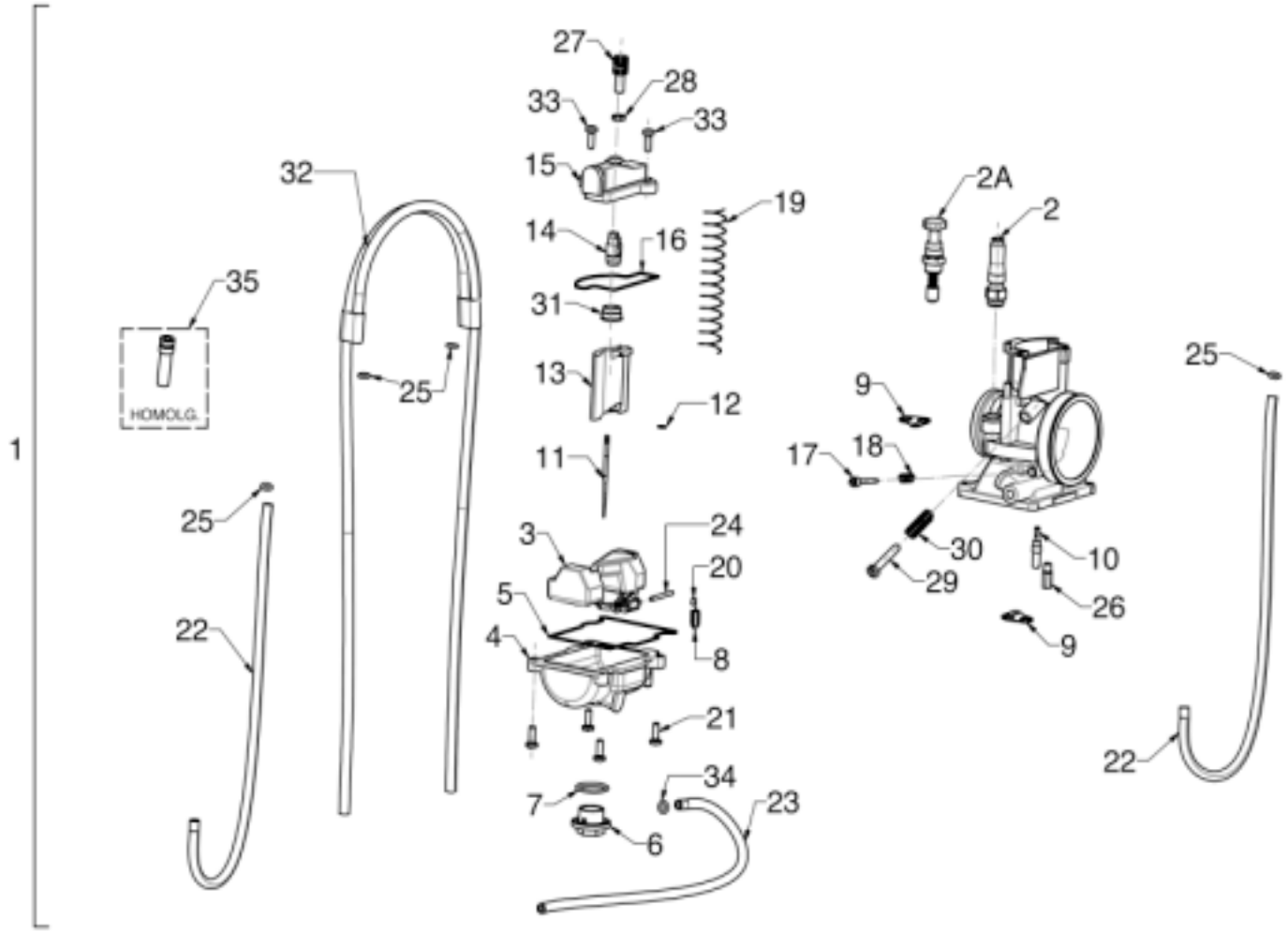
27
28
33
33
15
32
19
2A
2
14
16
35
31
HOMOLG.
13
25
25
9
12
1
11
17
18
25
3
24
30
10
20
29
5
26
22
4
8
9
21
22
34
7
23
6

Nº	DESCRIPCION / DESCRIPTION	250		Cant.
31	CASQUILLO MUELLE COMPUERTA / COVER SPRING BUSHING	ME25690040	ME25690040	1
32	TUBO VENTILACIÓN / BOWL VENT PIPE	ME25000343012	ME25000343012	1
33	TORNILLO TAPÓN COMPUERTA / CARBURATOR COVER SCREW	ME25000353012	ME25000353012	2
34	CLIP TUBO RESPIRADERO 2 / CLIP FOR AIR HOSE 2	ME25000363012	ME25000363012	1
35	TOPE MANDO DE GAS / STOP THROTTLE CABLE	ME250690010	ME250690010	1

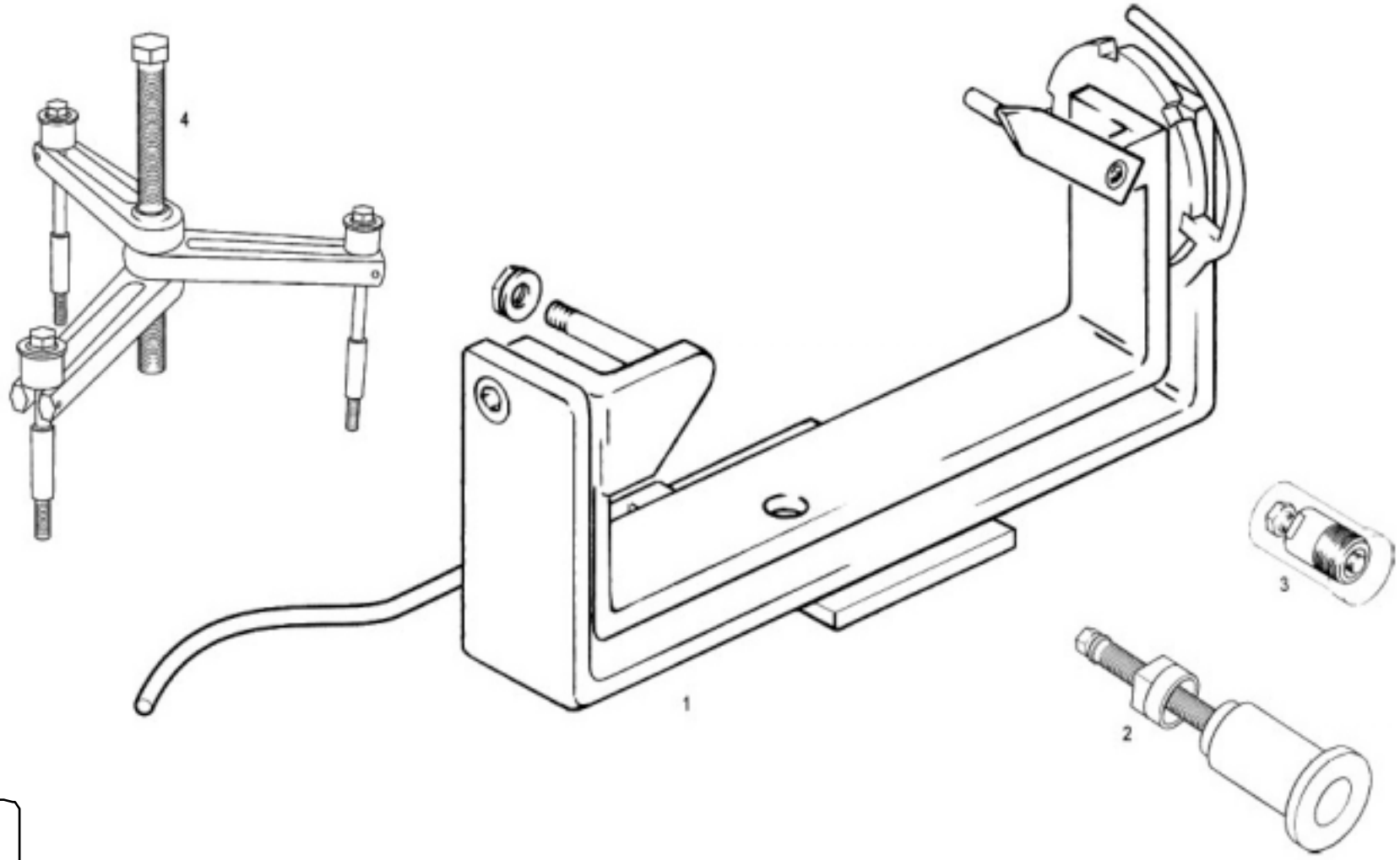
4
1
2
3

Nº	DESCRIPCION / DESCRIPTION	125	Cant.
1	BANCADA MOTOR / MOTOR HOLDER	BT27950050	1
2	EXTRACTOR SEMICIGÜEÑAL ENCENDIDO / SEMI CRANK SHAFT EXTRACTOR	ME25950000	1
3	EXTRACTOR VOLANTE KOKUSAN / KOKUSAN FLYWHEEL EXTRACTOR	ME25634045	1
4	EXTRACTOR CARTERES / CRANKCASE EXTRACTOR	ME25950005	1

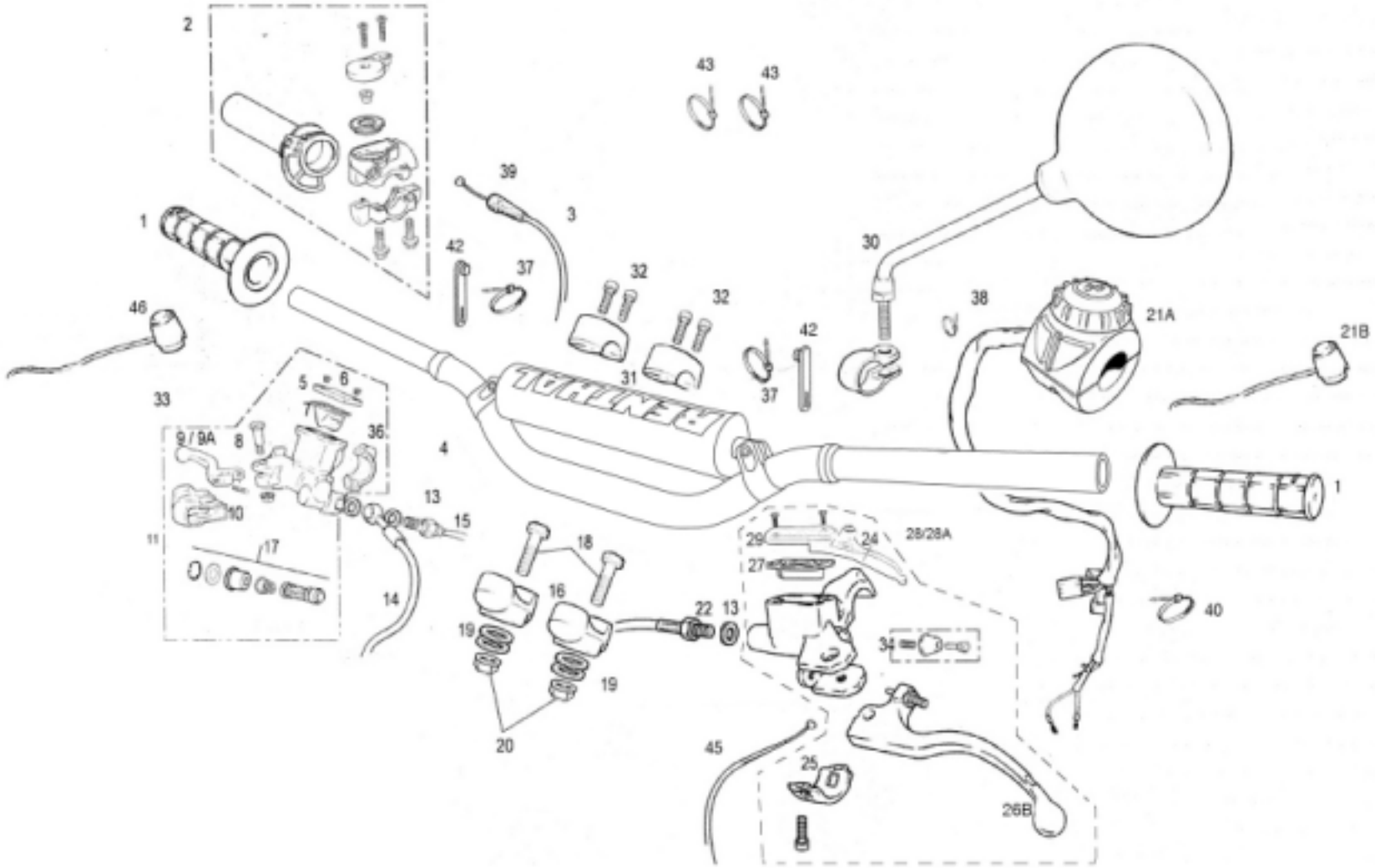
2
43
43
39
3
1
42
37
32
32
30
38
21A
21B
46
42
37
31
33
5
6
7
9 / 9A
8
36
4
13
15
10
11
17
14
18
16
22
13
19
19
20
29
24
28/28A
27
34
40
45
25
26B
1

Nº	DESCRIPCION / DESCRIPTION	EC		Cant.
1	JUEGO DE EMPUÑADURAS NEGRA-ROJA / HANDLEBAR GRIP BLACK-RED (PAIR)	BE26100N3010		1
2	PUÑO DE GAS / TWIST GRIP	BE25724007		1
3	CABLE DE GAS / THROTTLE CABLE	BE785002509		1
4	MANILLAR RENTHAL / RENTHAL HANDLEBAR	BE25000R2510		1
5	TAPA BOMBA FRENO / BRAKE PUMP COVER	BC25922210		1
6	TORNILLO TAPA BOMBA / BRAKE PUMP SCREW	BC25922217		2
7	GOMA ANTIESPUMANTE / NO-FOAM RUBBER	BC25922216		1
8	TORNILLO ESPECIAL / SPECIAL SCREW	BC25922212		1
9A	MANETA FRENO TT 250 / FRONT BRAKE TT 250	BC250022045R		1
10	TENSOR MANETA BOMBA / PUMP LEVER TENSOR	BC25922218		1
11	GUARDAPOLVO / DUST COVER	BC25922213		1
13	ARANDELA LATIGUILLO 10X14X1 / HOSE WASHER 10X14X1	BE25622007		3
14	LATIGUILLO FRENO DEL / BRAKE HOSE FRONT	BE250422002		1
15	INTERRUPTOR STOP BOMBA / PUMP STOP SWITCH	BE250334003		1
16	BRIDA SUJECIÓN MANILLAR INFERIOR / HANDLEBAR CLAMP (LOWER)	BE250614013		2
17	KIT PISTÓN BOMBA FRENO “A” / “A” BRAKE PUMP PISTON KIT	BC25922219		1
18	*TORNILLO ESPECIAL 10X45 / 10X45 SPECIAL BOLT	T0201045		2
19	DISTANCIADOR BRIDA INFERIOR MANILLAR EC2003 / CLAMP HANDLEBAR SPACER	BE250314035		4
20	TUERCA CILINDRO 8.8 ESP. 10/150C13 / NUT CYLINDER M10	M01613001		2
21A	CONMUTADOR LUZ / LIGHT SWITCH	EE10000043012		1
21B	INTERRUPTOR LUZ RACING / RACING LIGHT SWITCH	EE602002511		1
22	LATIGUILLO EMBRAGUE / CLUTCH HOSE	BE250522003		1
24	TAPA CON LEVA / COVER WITH LEVER	BE460012508		1
25	BRIDA SUJECIÓN / MOUNTING BRACKET	BE250022211		1
26B	MANETA EMBRAGUE LARGA / LONG CLUTCH LEVER	BE45000033011		1
27	MEMBRANA DEPÓSITO / RESERVOIR MEMBRANE	BE45000103011		1
28	BOMBA EMBRAGUE HIDRÁULICO CON LEVA / HYDRAULIC CLUTCH PUMP WITH LEVER	BE250622040		1
28A	BOMBA EMBRAGYE / HYDRAULIC CLUTCH PUMP	BE250522009		1
29	KIT TAPA BOMBA EMBRAGUE / CLUTCH PUMP COVER KIT	BE250622210		1
30	ESPEJO RETROVISOR / REAR-VIEW MIRROR	L300760		2
31	BRIDA SUJECIÓN MANILLAR SUPERIOR / HANDLEBAR CLAMP (UPPER)	BE250614012		2
32	TORNILLO SUJECIÓN BRIDA MANILLAR 8x30 / CLAMP SCREW 8x30	T0308030		4

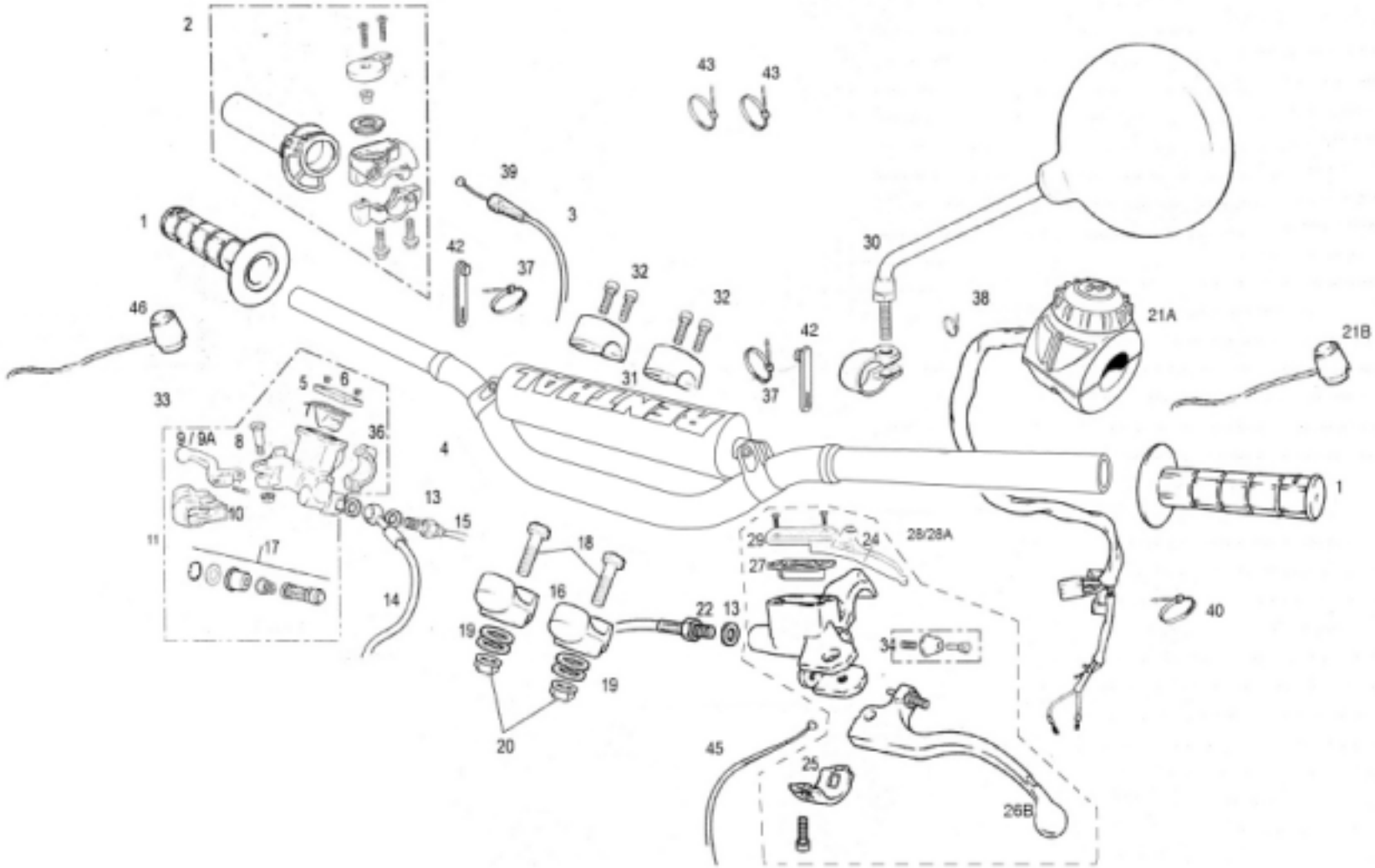
2
43
43
39
3
1
42
37
32
32
30
38
21A
21B
46
42
37
31
33
5
6
7
9 / 9A
8
36
4
13
15
10
11
17
14
18
16
22
13
19
19
20
29
24
28/28A
27
34
40
45
25
26B
1

Nº	DESCRIPCION / DESCRIPTION	EC		Cant.
33	BOMBA FRENO DELANTERO / FRONT BRAKE PUMP SET	BC25922008/2		1
34	KIT PISTÓN 9,5 / PISTON KIT 9,5	BT27722208		1
36	BRIDA	BC25922211		1
37	BRIDA GRANDE / BIG CLAMP	BE25634009		2
38	BRIDA PEQUEÑA / LITTLE CLAMP	BE25634010		1
39	GUARDAPOLVO CABLE GAS / DUST COVER THROTTLE CABLE	G600000		1
40	BRIDA UNEX CORTA 2221-0 2.5X98 / SHORT UNEX CLAMP 2221-0 2.5X98	BE25634010		1
42	GOMA SUJECIÓN CABLEADO / CABLED RUBBER HOLDER	BFS450320067		2
43	BRIDAS SERRETAS / CLAMP	BE25634007		2
45	CABLE STARTER /STARTER CABLE	BE256012508		1
46	BOTÓN DE PARO KE9B / STOP BUTTON KE9B	BC250334055		1

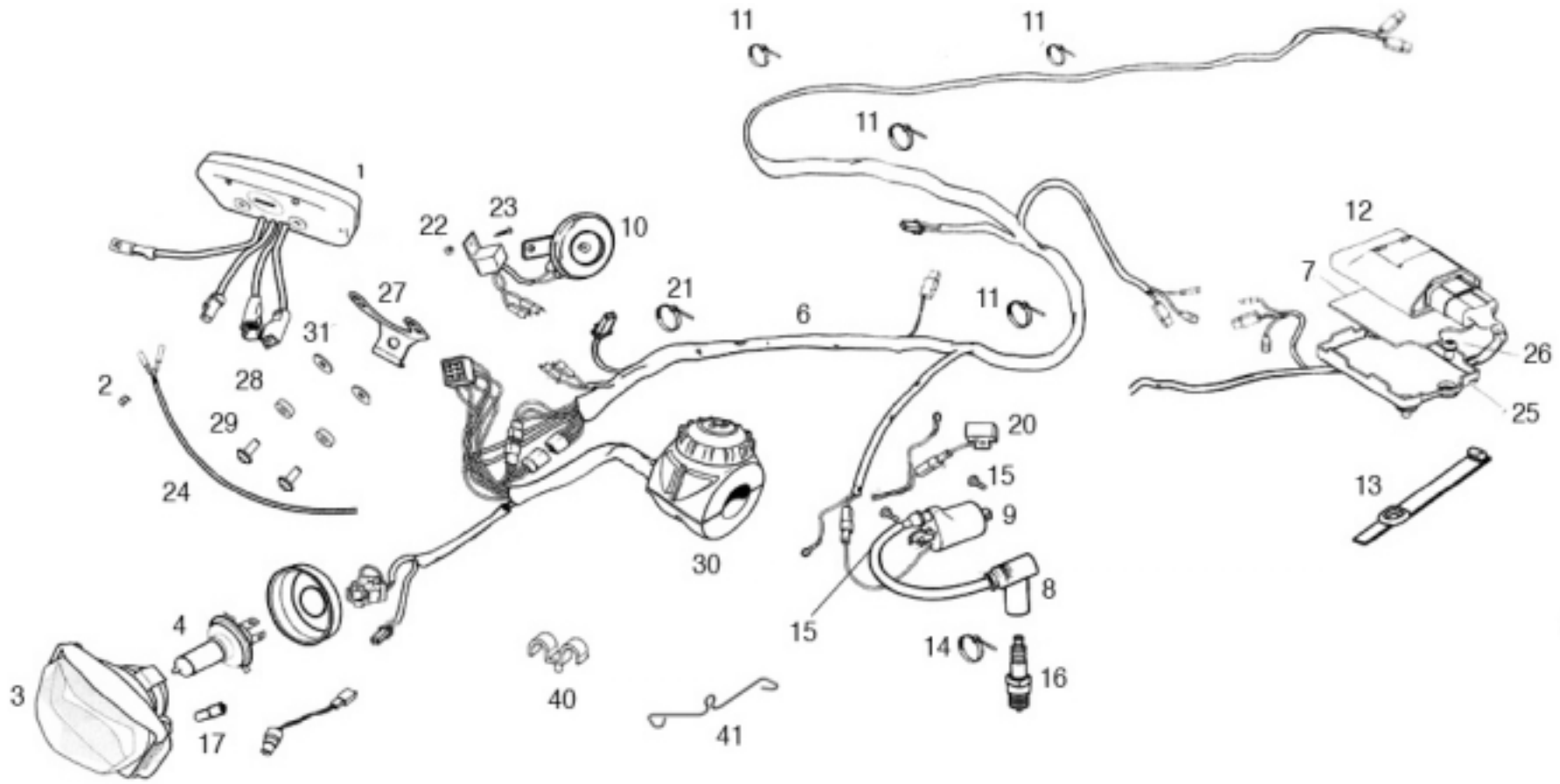
11
11
11
1
23
22
10
12
7
27
21
6
11
31
26
2
28
25
29
20
24
15
13
9
30
8
4
15
14
16
3
40
17
41

Nº	DESCRIPCION / DESCRIPTION	125		Cant.
1	CTO. MULTIFUNCIÓN ENDURO / ENDURO MULTIFUNCTION SET	EE600002513		1
2	PASACABLES CTA. KMS. / SPEED CABLE HOSE	EE650202508		3
3	ÓPTICA HALÓGENA / HALOGEN OPTIC	EE200002511		1
4	BOMBILLA HALÓGENA HS1 12V35- 35W / HS1 12V35-35W HALOGEN BULB	L300125		1
5	INTERMITENTE IZQUIERDO DELANTERO / LEFT FRONT INDICATOR	BE250634019		1
6	INSTALACIÓN ELÉCTRICA PRINCIPAL / MAIN WIRING HARNESS	EE10000013012		1
7	ESPUMA PROTECTOR CDI EC 2005 / EC 2005 CDI PROTECTOR FOAM	BE250534109		1
8	PIPA BUJÍA LBMH / SPARK PLUG CAP LBMH	BE25934000		1
9	BOBINA KOKUSAN / KOKUSAN IGNITION COIL	ME250434006		1
10	CLAXON / HORN	EE204002508		1
11	BRIDA UNEX 4,8X20 / UNEX CLAMP 4.8X20	BE25634009		7
12	CDI KOKUSAN / KOKUSAN CDI	EE511001213CT		1
13	GOMA SUJECIÓN CDI / CDI ELASTIC BAND	BE250034100		1
14	BRIDA UNEX CORTA 2221-0 2.5X98 / SHORT CLAMP 2221-0 2.5X98	BE25634010		1
15	TORNILLO 6X16 / SCREW 6X16	T0206016		2
16	BUJÍA W24ESRU / PLUG W24ESRU	ME25934000		1
17	BOMBILLA LUZ POSICIÓN / SIDELIGHT BULB	L300126		1
18	ULS 6X16 NEGRO / 6X16 ULS BLACK BOLT	T0506016N		2
19	TUERCA CON ARANDELA M6 / NUT WITH WASHER M6	T2206000		2
20	REGULADOR / REGULATOR	L300031		1
21	BRIDA NYLON 3.6X140 / NYLON CLAMP 3,6X140	BE250022031		1
22	TUERCA M6 / NUT M6	T2606000		1
23	TORNILLO ULS M6X16 / ULS SCREW M6X16	T0556016		1
24	CABLE MULTIFUNCIÓN TT 2003 / 2003 TT MULTIFUNCTION HOSE	BE250634050		1
25	SOPORTE CDI EC 2008 / EC 2008 CDI SUPPORT	BE250534107		1
26	TORNILLO ULS M6X12 / ULS SCREW M6X12	T0506012		2
27	SOPORTE MULTIFUNCIÓN / MULTIFUNCTION SUPPORT	BFS450634045		1
28	ARANDELA GOMA X 2	EE650102508		2
29	TORNILLOS 4 X 10 ULS NEGRO	T0554010N		2
30	COMMUTADOR LUCES	EE10000043012		1
31	ARANDELA 4 X 12 X 1	T4004012		2

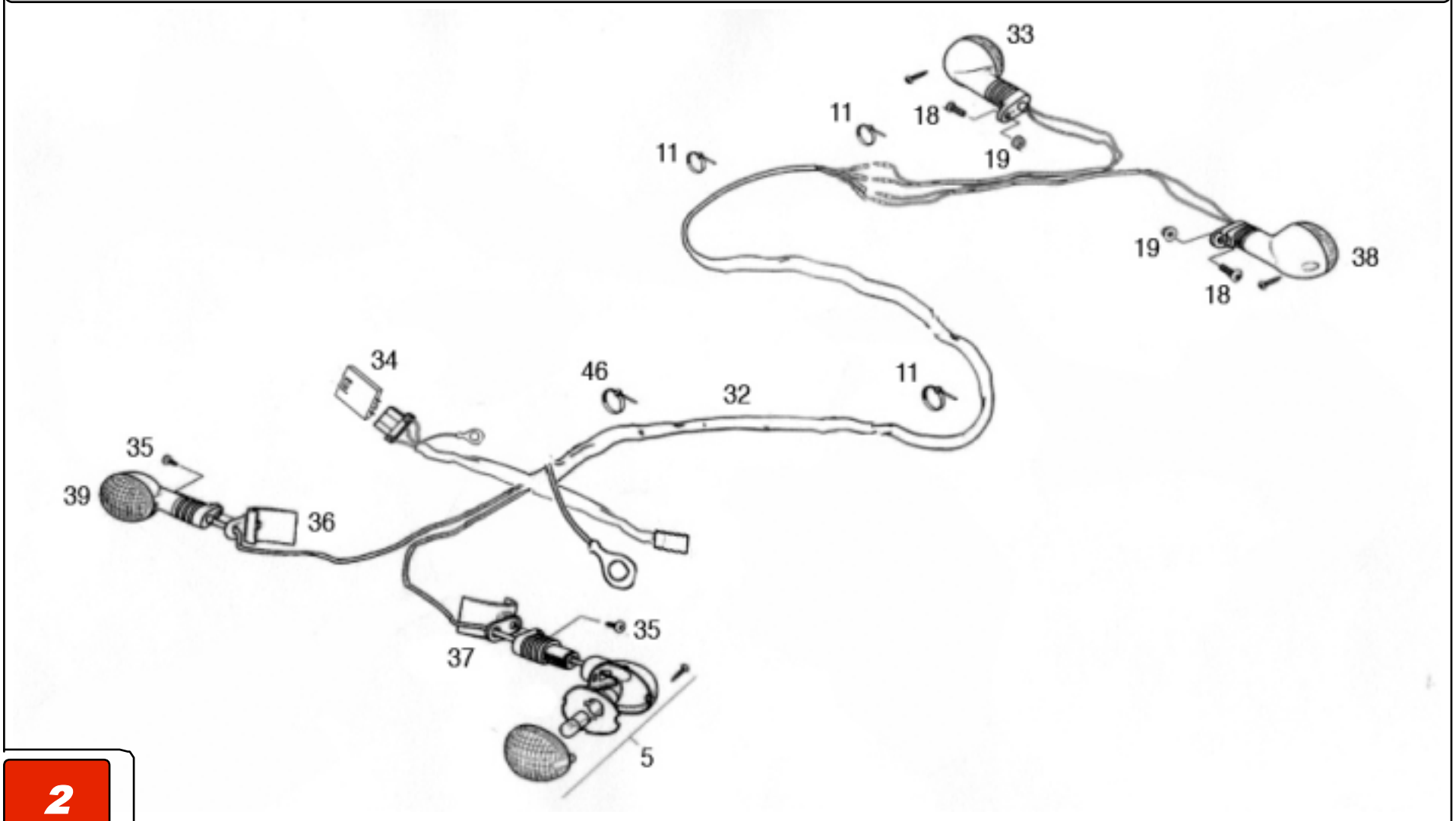
33
11
18
11
19
19
38
18
34
46
32
11
35
39
36
35
37
5

Nº	DESCRIPCION / DESCRIPTION	125		Cant.
32	INSTALACIÓN INTERMITENTES / INDICATOR INSTALLATION	EE10000023012		1
33	INTERMITENTE DERECHO TRASERO / RIGHT REAR INDICATOR	BE250634021		1
34	CAJA INTERMITENCIAS / I NTERMITENT BOX	EE201752509		1
35	TORNILLO CHAPA / SPECIAL SCREW	T0706316		2
36	SOPORTE INTERMITENTE DEL. DER. / RIGHT FRONT INDICATOR HOLDER	BE250134017		1
37	SOPORTE INTERMITENTE DEL. IZDO / LEFT FRONT INDICATOR HOLDER	BE250134020		1
38	INTERMITENTE IZQUIERDO TRASERO / LEFT REAR INDICATOR	BE250634022		1
39	INTERMITENTE DERECHO DELANTERO / RIGHT FRONT INDICATOR	BE250634018		1
40	SOPORTACABLES / WIRING HOLDER	EE10000083012		6
41	MUELLE SUJECIÓN CABLES / WIRING HOLDER SPRING	EE10000093012		1

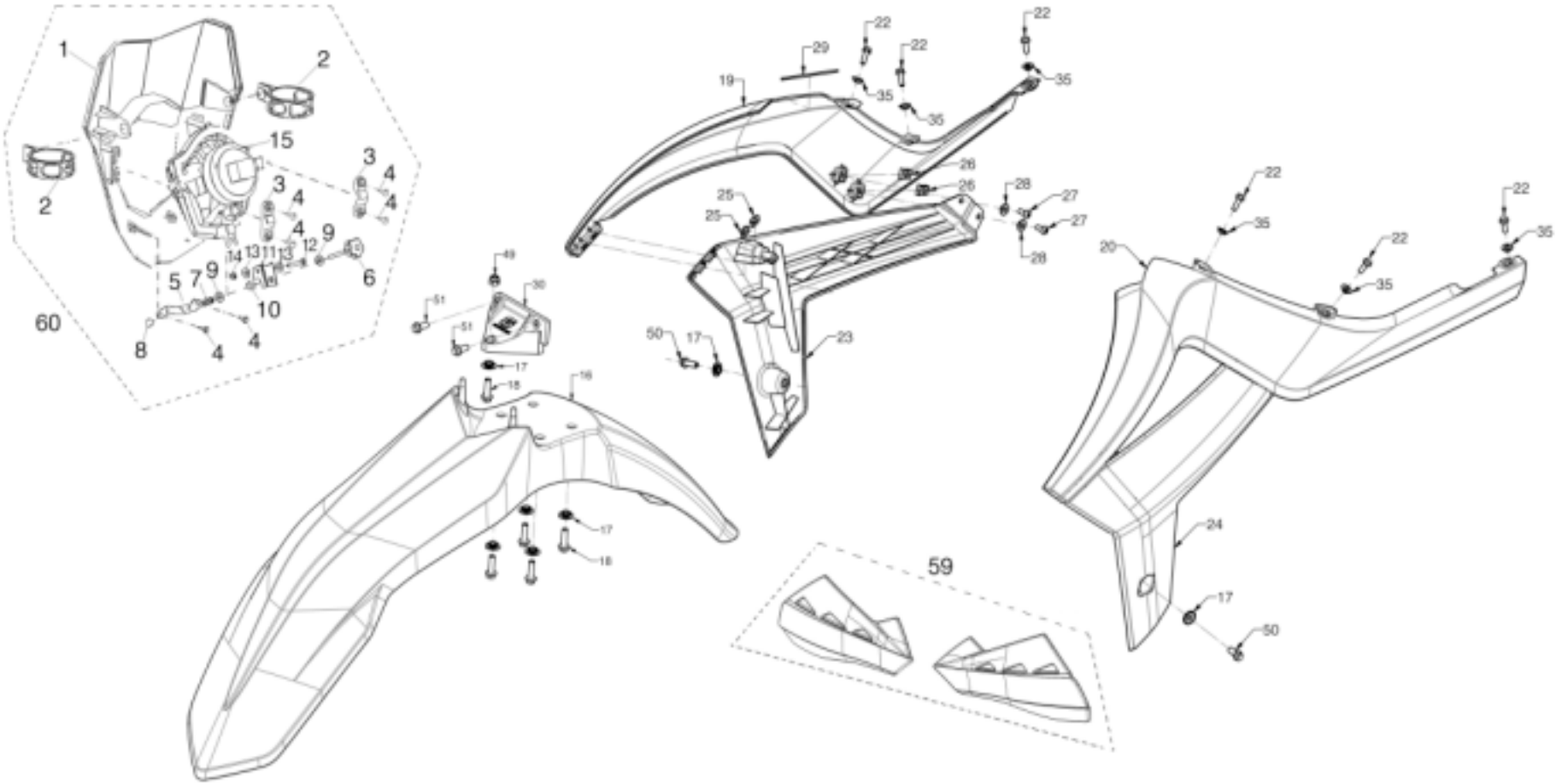
1
2
2
15
3
4
3
4
4
4
9
6
5
7
9
14
13
11
13
12
10
60
8
4
4
49
30
51
51
17
18
16
50
17
23
29
19
22
22
22
35
35
35
26
26
25
25
28
27
27
28
20
22
35
22
35
22
35
24
17
50
17
18
59

Nº	DESCRIPCION / DESCRIPTION	125	Cant.
1	PORTAFAROS DELANTERO BLANCO 2013 / HEAD LIGHT MASK WHITE 2013	BE905003013	1
2	GOMA SUJETA FARO / MASK RUBBER	BE25635015	2
3	SOPORTE FARO BLANCO / HEAD LIGHT HOLDER WHITE	BE905102511	2
4	TORNILLO 4 X 12 / SCREW 4 X 12	T0804012	6
5	CHAPA REGULACION FARO / HEAD LIGHT ADJUSTER PLATE	BE90000033012	1
6	TORNILLO REGULACION FARO / HEAD LIGHT ADJUSTER SCREW	BE35000013012	1
7	MUELLE / SPRING	BX250020026	1
8	TUERCA M5 / NUT M5	T2105000	1
9	ARANDELA D5 / WASHER D5	T4005012	2
10	CASQUILLO / BUSH	T90055100006M	1
11	PLACA / PLATE	EE20000013012	1
12	TORNILLO ALLEN M4 X 25 / ALLEN SCREW M4 X 25	T0304025	1
13	ARANDELA D4 / WASHER D4	T4004012	2
14	TUERCA M4 / NUT M4	T2104000	1
15	OPTICA FARO DELANTERO / HEAD LIGHT	EE200002511	1
16	GUARDABARROS DELANTERO BLANCO RACING 2013 / FRONT FENDER WHITE RACING 20	BE910003013CT	1
17	CASQUILLO / BUSH	BE250032060	5
18	TORNILLO M6 X 20 / SCREW M6 X 20	T0206020	5
19	TAPA RADIADOR SUP. BLANCA DERECHA 2013 / UPPER RIGHT RADIATOR COVER RIGHT WH	BE9150053013CT	1
20	TAPA RADIADOR SUP. IZQ. BLANCA IZQUIERDA 2013 / UPPER LEFT RADIATOR COVER LEFT	BE920053013CT	1
21	CASQUILLO / BUSH	BE250026000	1
22	TORNILLO M5 X 16 / SCREW M5 X 16	T0505016	6
23	TAPA RADIADOR INF. DER. BLANCA 2013 / LOWER RIGHT RADIATOR COVER WHITE 2013	BE915103013CT	1
24	TAPA RADIADOR INF. IZQ. BLANCA 2013 / LOWER LEFT RADIATOR COVER WHITE 2013	BE920103013CT	1
25	GRAPA FIJACION TAPAS / FIXING CLAMP	BE35000083012	4
26	TUERCA / NUT	BX250020029	4
27	TORNILLO 4.8 X 13 / SCREW 4.8 X 13	T0606013	4
28	ARANDELA D5 / WASHER D5	T4005012	4
29	TIRA GOMA ADHESIVA / ADHESIVE RUBBER TAPE	BE10000553012	2
30	TIRANTE GUARDABARROS DELANTERO MY12	BE90000463012	1
31	CTO. PORTAFAROS DELANTERO RACING 2013	BE905003013CT	1

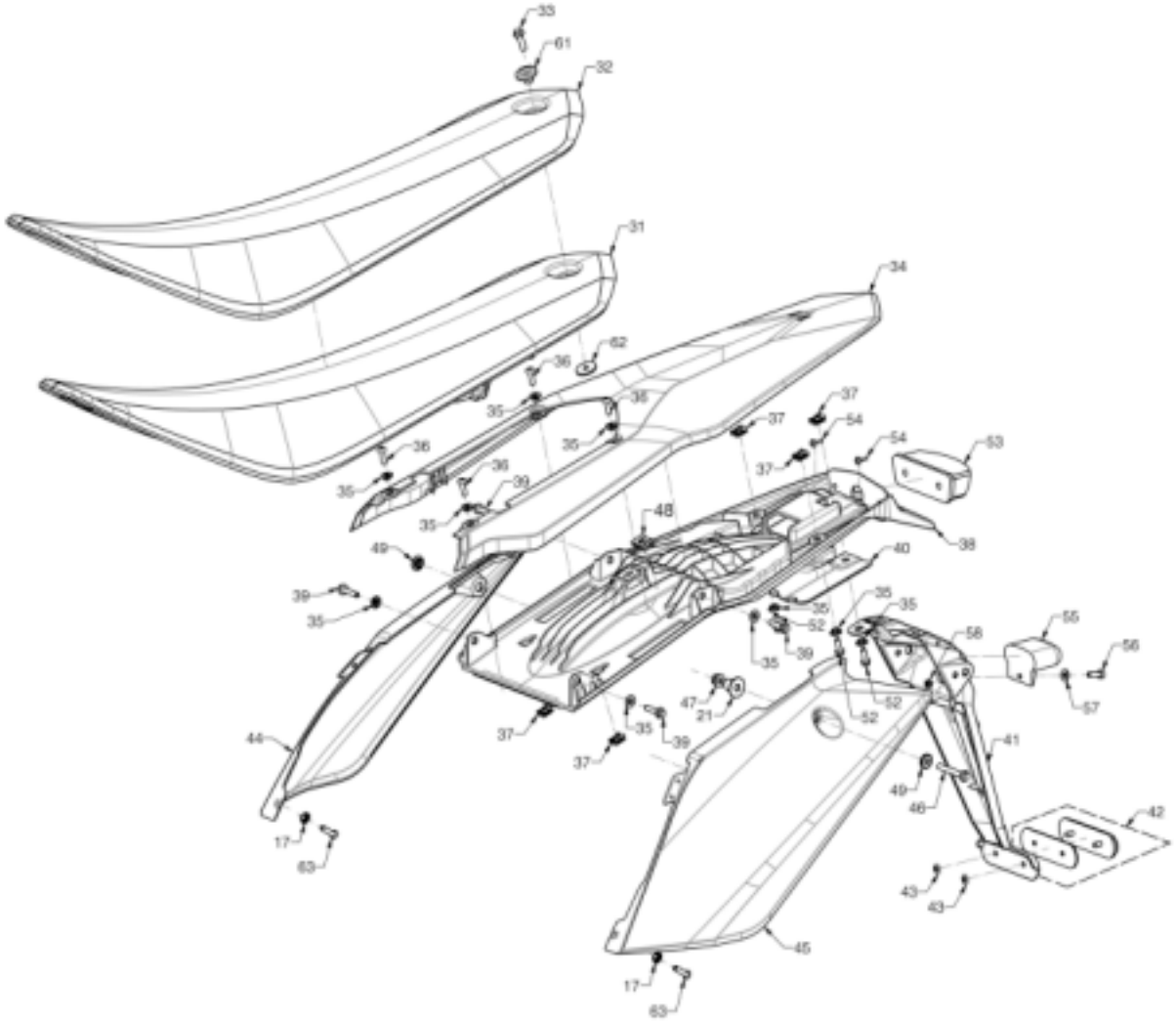
33
61
32
31
34
62
36
35
38
37
54
53
48
49
39
40
52
55
56
57
58
47
21
44
41
46
42
43
17
63
45

Nº	DESCRIPCION / DESCRIPTION	125	Cant.
31	SILLIN 2013 / SEAT 2013	BE90000063013	1
32	FUNDA SILLIN 2012 / SEAT COVER 2012	BE90000453012	1
33	TORNILLO M6 X 25 / SCREW M6 X 25	T0206025	1
34	GUARDABARROS TRASERO ROJO 2013 / REAR FENDER RED 2013	BE930013013CT	1
35	CASQUILLO / BUSH	T90052080004K	17
36	TORNILLO M5 X 16 / SCREW M5 X 16	T0505016	4
37	TUERCA M5 / NUT M5	T810599990001	5
38	SOPORTE GUARDABARROS TRASERO / REAR FENDER SUPPORT	BE90000083013	1
39	TORNILLO M5 X 25 / SCREW M5 X 25	T0205025	7
40	TAPA DE CONECTORES / PLUGS COVER	BE90000153012	1
41	PORTAMATRICULA / NUMBER PLATE SUPPORT	BE90000123012	1
42	CATADRIOPTICO / REFLECTOR RED	BQ300234125/2	1
43	GRAPA / CLIP	BQ300234126	2
44	PORTANUMERO DERECHO BLANCO 2013 / RIGHT NUMBER PLATE WHITE 2013	BE925003013CT	1
45	PORTANUMERO IZQUIERDO BLANCO 2013 / LEFT NUMBER PLATE WHITE 2013	BE930003013CT	1
46	TORNILLO M6 X 45 / SCREW M6 X 45	T0206045	1
47	TUERCA M6 / NUT M6	T2206002	1
48	TUERCA NUT 956 RAPIDA M6	T2606000	1
49	CASQUILLO ALUMINIO / ALUMNIUM BUSH	BE320602500	2
50	TORNILLO ESPECIAL ZINCADO 6X16 / SPECIAL SCREW 6X16	T0206016	2
51	HEXAGONAL 6 X 14 CON ARANDELA INCORPORADA	T0206014	2
53	PILOTO TRASERO / REAR LIGHT	BE250734015	1
54	TORNILLO M4 X 12 / SCREW M4 X 12	T0804012	2
55	LUZ MATRICULA / NUMBER PLATE LIGHT	BE250734124	1
56	TORNILLO ALLEN M5 X 16 / ALLEN SCREW M5 X 16	T0305016	1
57	ARANDELA D5 / WASHER D5	T4005012	1
58	TUERCA M5 / NUT M5	T2105001	1
59	PARAMANOS BLANCO / HANDGUARD WHITE	BE90000223012	1
60	CTO. FARO RACING 2013 BLANCO / HEAD LIGHT ASSY RACING 2013 WHITE	BE905003013CT	1
61	CASQUILLO ASIENTO EC 2013 / BUSH SEAT EC 2013	BE35000093012	1
62	ARANDELA PLÁSTICO SILLÍN EC 2007	BE250710213	1
63	TORNILLO M5 X 20 ULS / SCREW M5 X 20 ULS	T0505020	2

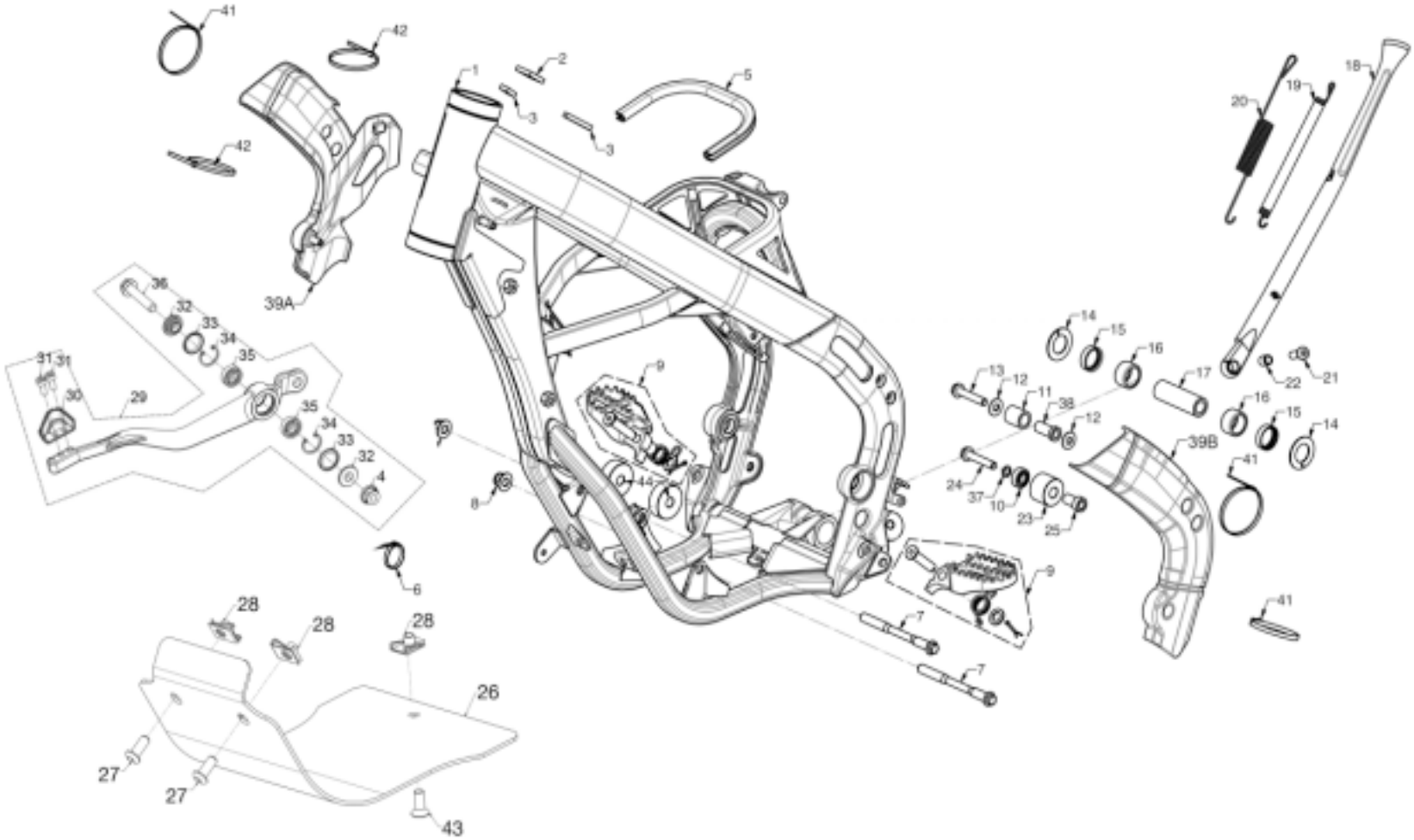
41
42
42
1
2
3
3
5
18
19
20
39A
36
32
33
34
35
31
31
30
29
35
34
33
32
4
9
44
8
6
14
15
16
13
12
11
38
12
17
22
21
16
15
14
39B
41
24
37
10
23
25
9
7
7
41
28
28
28
26
27
27
43

Nº	DESCRIPCION / DESCRIPTION	125	Cant.
1	CHASIS ROJO 125cc 2013 / FRAME RED 125cc 2013	BE100001213	1
2	CUADRADO GOMA ADHESIVA / ADHESIVE RUBBER SQUARE	BE10000303012	1
3	TIRA GOMA ADHESIVA / ADHESIVE RUBBER STRIP	BE10000313012	2
4	TUERCA M8 / NUT M8	T2208002	1
5	BURLETE / RUBBER SEAM	BE10000563012	1
6	BRIDA 4.8 X 20 / STRAP 4.8 X 20	BE25634009	2
7	TORNILLO M10 x 130 / SCREW M10 x 130	T0310130	2
8	TUERCA M10 X 125 / NUT M10 X 125	T3110002	2
9	CONJUNTO ESTRIBOS / FOOTREST ASSY	BE10000223012	1
10	RODAMIENTO BOLAS SKF 608 2RS1	BE05000033013	1
11	RODILLO / ROLLER	BE25610032	1
12	ARANDELA D8 / WASHER D8	T4008020	2
13	TORNILLO M8 X 45 / SCREW M8 X 45	T0208055	1
14	ARANDELA IGLIDUR / WASHER IGLIDUR	T4003822	2
15	RETEN D28 / SEAL D28	BE32025N3011	2
16	JAULA DE AGUJAS / NEEDLE BEARING	BE25614010	2
17	EJE / AXLE	BE32020N3011	1
18	CABALLETE / SIDE STAND	BE10000323012	1
19	MUELLE INTERNO CABALLETE / INNER SPRING FOR SIDE STAND	BE10000523012	1
20	MUELLE EXTERNO CABALLETE / OUTER SPRING FOR SIDE STAND	BE250510039	1
21	TORNILLO M8 X 30 / SCREW M8 X 30	T0508030	1
22	CASQUILLO ACERO / STEEL BUSH	T90081110015C	1
23	RODILLO / ROLLER	BE05000013013	1
24	TORNILLO ESPECIAL 8X45 8.8 ZINCADO / SPECIAL SCREW 8X45	T0208045	1
25	CASQUILLO / BUSH	BE05000023013	1
26	PROTECTOR CARTER 125cc 2012 / SKID PLATE 125cc 2012	BE115001213	1
27	TORNILLO M8 X 20 / SCREW M8 X 20	T0508020	2
28	TUERCA M8 / NUT M8	BT280010041	3
29	CONJUNTO PEDAL FRENO TRASERO / REAR BRAKE LEVER ASSY	BE15000003012	1
30	PUNTERA PEDAL FRENO TRASERO / STEP PLATER FOR REAR BRAKE LEVER	BE130102510	1
31	TORNILLO ALLEN M5 X 12 / ALLEN SCREW M5 X 12	T0305012	2
32	CASQUILLO / BUSH	B15000023012	2

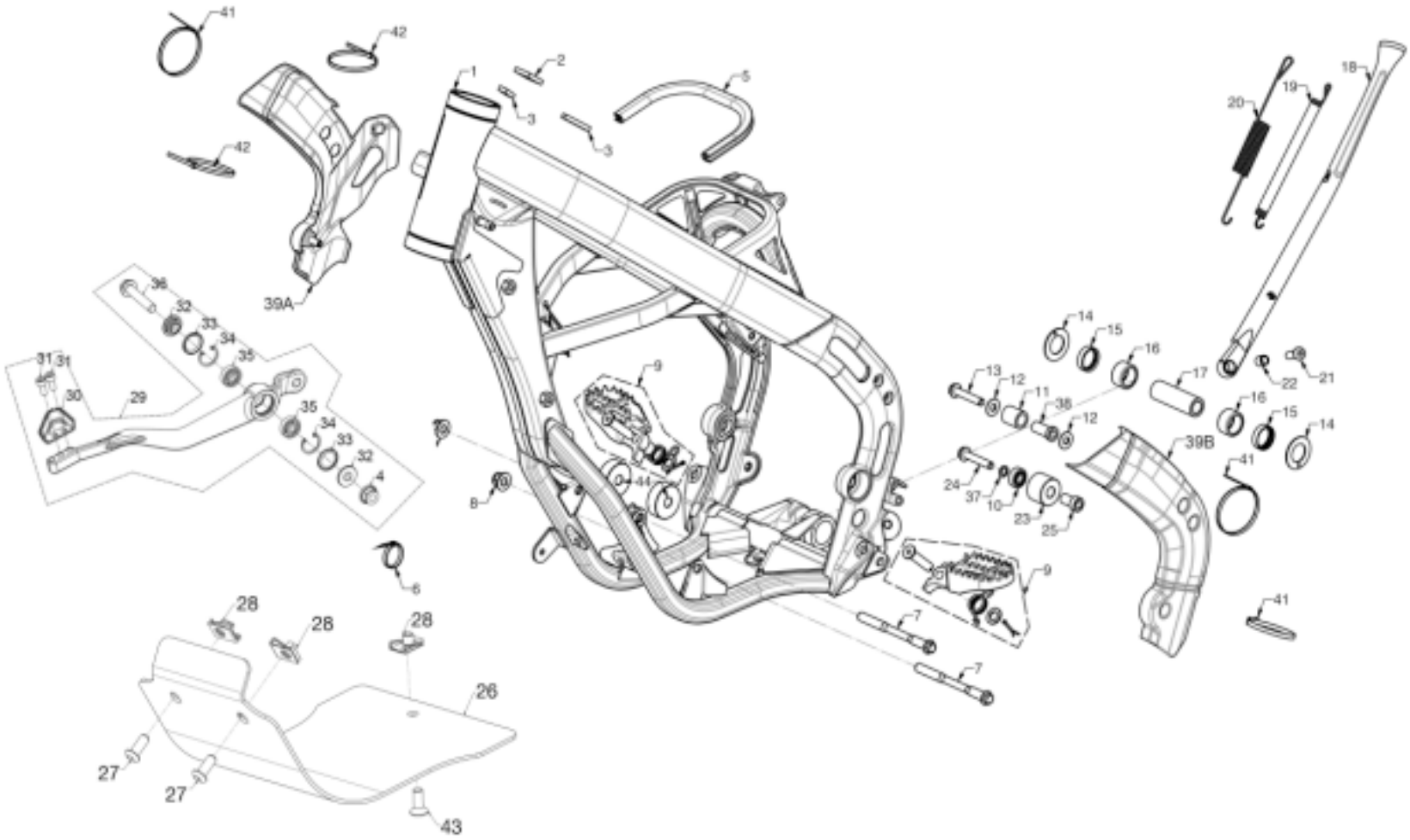
41
42
42
1
2
3
3
5
18
19
20
39A
36
32
33
34
35
31
31
30
29
35
34
33
32
4
14
15
16
17
13
12
11
38
12
22
21
16
15
14
39B
41
9
44
8
24
37
10
23
25
9
6
7
7
41
28
28
28
26
27
27
43

Nº	DESCRIPCION / DESCRIPTION	125	Cant.
33	RETEN D15 / SEAL D15	C230001	2
34	ARANDELA SEEGER D19 / WASHER SEEGER D19	SE01190100109	2
35	RODAMIENTO BOLAS / BALL BEARING	RD0108019006A	2
36	TORNILLO M8 X 45 / SCREW M8 X 45	T0208045	1
37	ARANDELA ESTRIM 8 X 15 / WASHER 8 X 15	T4006512	1
38	CASQUILLO / BUSH	BE25612016	1
39	CTO. PROTECTOR LATERAL CHASIS 2013 / SIDE PROTECTOR SET	BE190003013CT	1
41	BRIDA UNEX 2244 16/102 4,8 X 36	BE25634007	3
42	BRIDA NYLON 3,6 x 140 /	BE250022031	2
43	ALLEN CÓNICO 8 x 20 / CONICAL SCREW 8 x 20	T0408020	1
44	CASQUILLO SUP. MOTOR 125 cc / 125cc TOP ENGINE BUSH	BE109051213	2

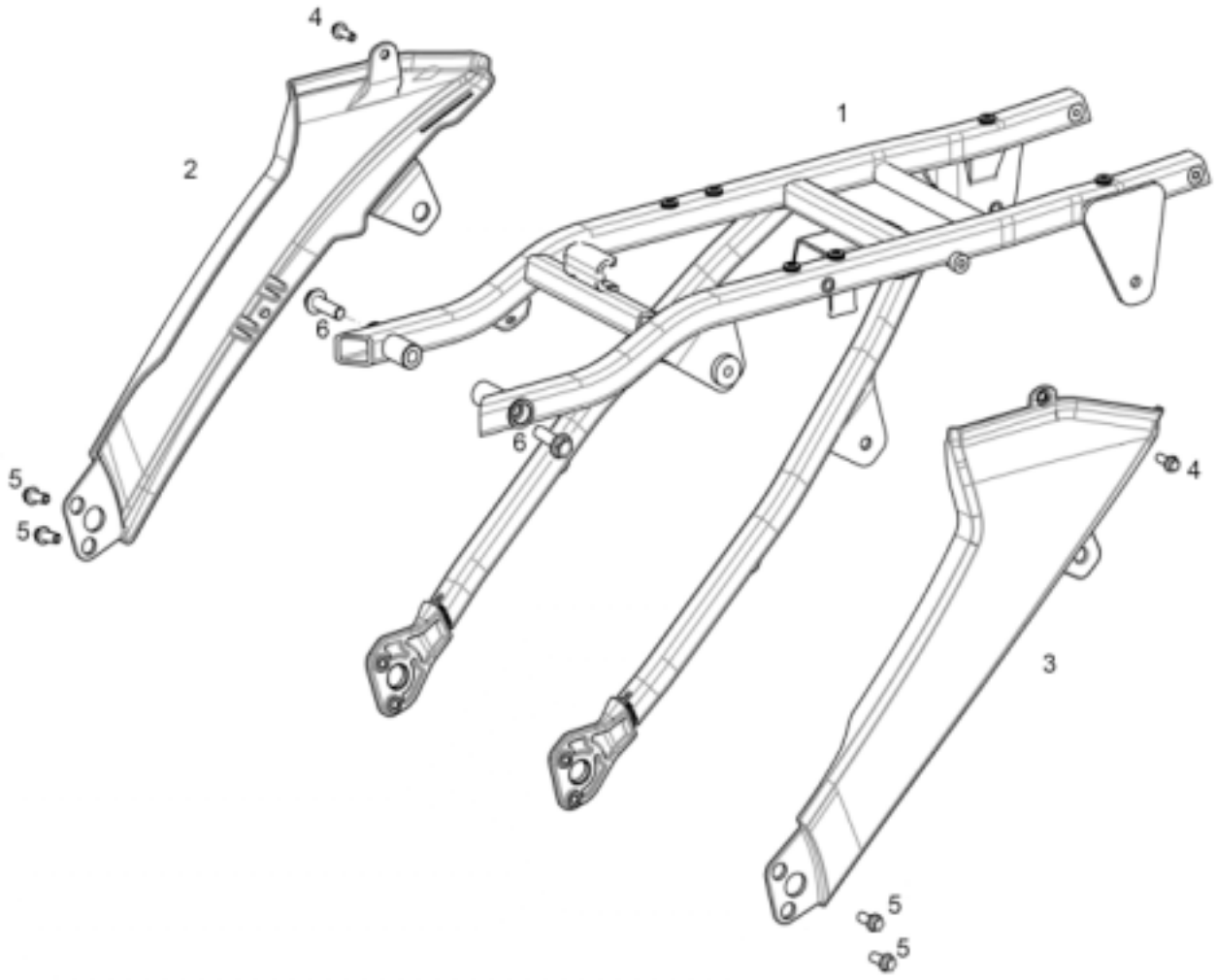
4
2
1
6
6
5
5
4
3
5
5

Nº	DESCRIPCION / DESCRIPTION	125	Cant.
1	SUBCHASIS DE ALUMINIO RACING 2013 / ALUMINIUM RAVING SUBFRAME 2013	BE120003013	1
2	EMBELLECEDOR DERECHO SUBCHASIS / SUBFRAME RIGHT SIDE	BE122003013	1
3	EMBELLECEDOR DERECHO SUBCHASIS / SUBFRAME LEFT SIDE	BE122053013	1
4	TORNILLO FIJACION EMBELLECEDOR	T0205015	2
5	INSERTO DIAM. 5 X 25	T0206014	4
6	PUENTE ALUMINIO	T0308050	2

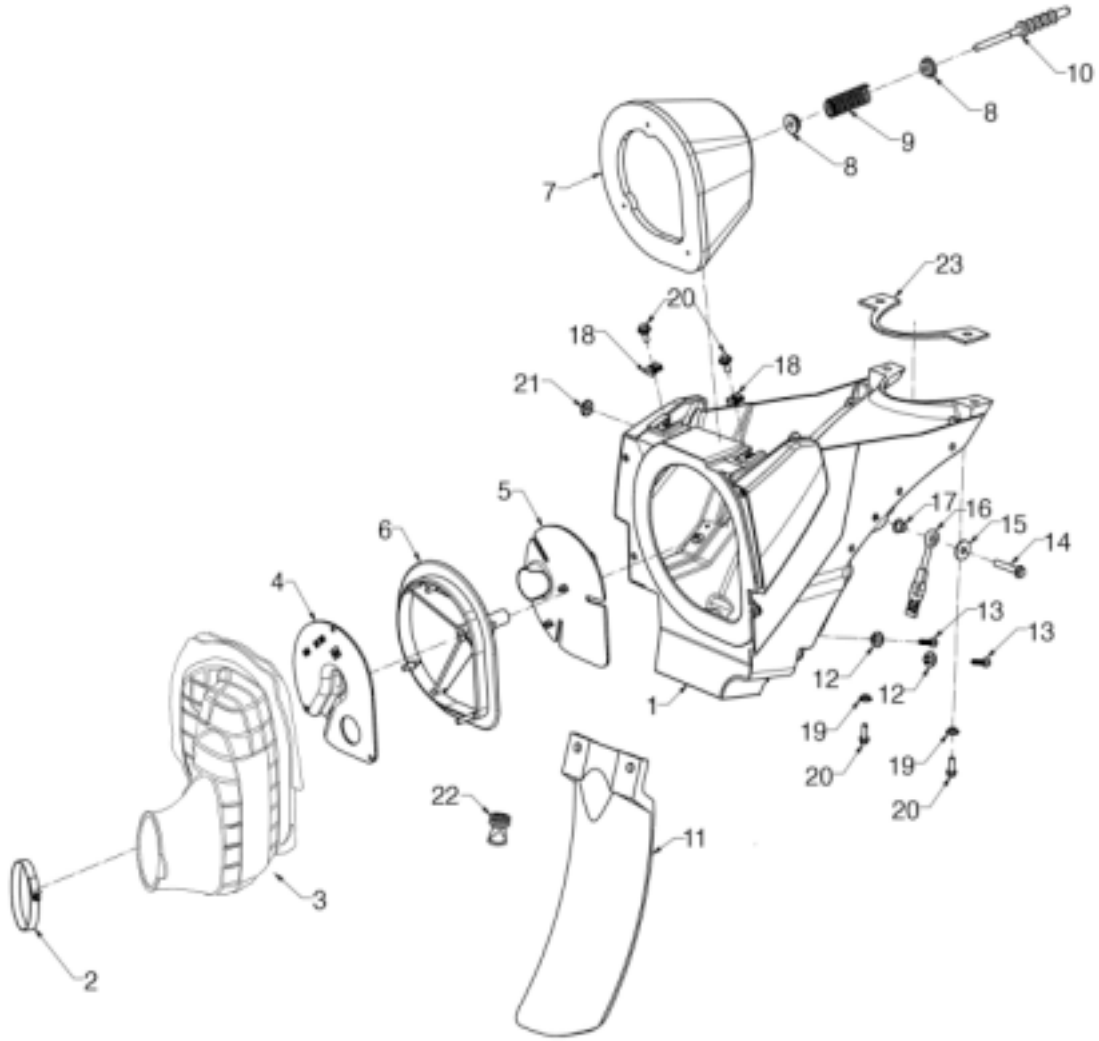
10
8
9
8
7
23
20
18
18
21
5
17
16
15
14
6
4
13
13
12
12
1
19
20
19
20
22
11
3
2

Nº	DESCRIPCION / DESCRIPTION	125	Cant.
1	CAJA DE FILTRO 2012 / FILTER BOX 2012	ME25000113012	1
2	ABRAZADERA / CLAMP	BE250328033	1
3	TOBERA CONEXIÓN CARBURADOR / CARBURATOR CONNECTING	BE250128017/2	1
4	RESTRICCION FILTRO AIRE DELANTERA / FRONT AIR FILTER RESTRICTION	BE798002508	1
5	RESTRICCION FILTRO AIRE TRASERA / REAR AIR FILTER RESTRICTION	BE798052508	1
6	SOPORTE FILTRO AIRE / AIR FILTER CARRIER	BE250628002	1
7	FILTRO AIRE / AIR FILTER	BE250728000	1
8	ARANDELA NYLON / NYLON WASHER	BE250728052	2
9	MUELLE / SPRING	BE250728051	1
10	VARILLA FILTRO AIRE / AIR FILTER SUPPORT	MF25000032512	1
11	PROTECTOR SUSPENSION TRASERA / FENDER FOR FILTER BOX	BE25620008	1
12	CASQUILLO / BUSH	BE250728059	2
13	TORNILLO 4,5 X 20 / SCREW 4,5 X 20	BE250728058	2
14	TORNILLO M6 X 35 / SCREW M6 X 35	T0206035	1
15	ARANDELA D6,5 / WASHER D6,5	T4006020	1
16	GOMA / RUBBER	BE25636000	1
17	CASQUILLO / BUSH	BE25610007	1
18	TUERCA M5 / NUT M5	T810599990007	2
19	CASQUILLO / BUSH	T90052080004K	4
20	TORNILLO M5 X 15	T0205015	4
21	CASQUILLO / BUSH	BE250032060	1
22	VALVULA VACIADO / DRAINAGE VALVE	BT280228032	1
23	JUNTA / GASKET	BE90000403012	1

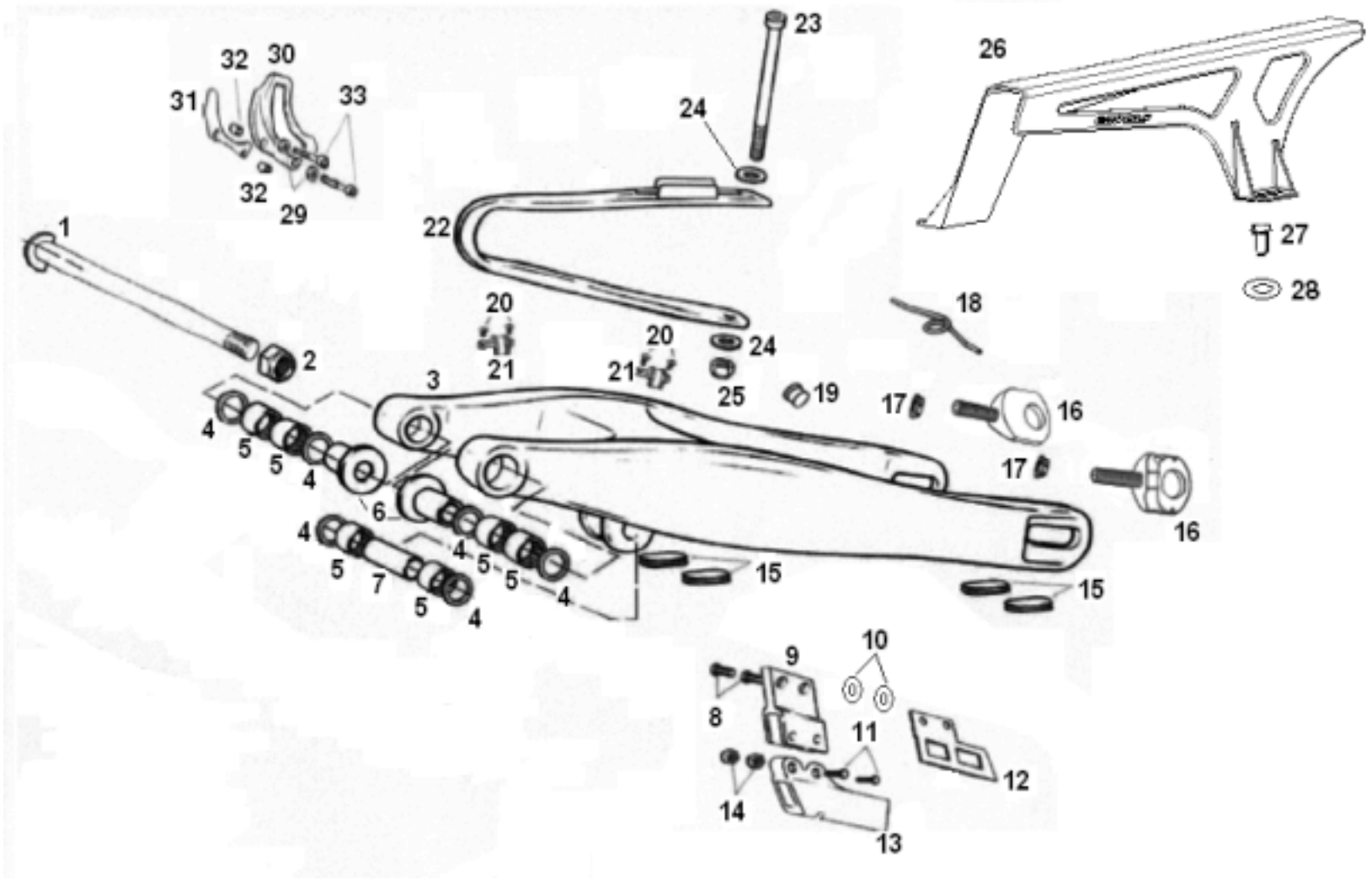
23
26
32
30
31
33
24
32
29
22
27
1
28
20
18
20
24
2
21
21
3
25
19
17
16
4
5
5
4
17
6
16
4
4
5
5
15
5
7
15
5
4
10
9
8
11
12
14
13

Nº	DESCRIPCION / DESCRIPTION	125	Cant.
1	EJE BASCULANTE / SWINGARM AXLE	BE250312008	1
2	TUERCA / NUT	BE25612009	1
3	BASCULANTE / SWINGARM	BE250612002RC	1
4	TORICA 3.5X21 / O-RING 3.5X21	BE250510011	6
5	JAULA AGUJAS / NEEDLE BEARING	BE25614010	6
6	CASQUILLO BASCULANTE / SWINGARM BUSH	BE400012511	2
7	CASQUILLO 14X22X57 / BUSH 14X22X57	BE25612014	1
8	TORNILLO ALLEN 8X20 / ALLEN SCREW 8X20	T0308020	2
9	SOPORTE GUIA CADENA / CHAIN GUIDE SUPPORT	BC250221018	1
10	ARANDELA PLANA 6X12X1.5 / FLAT WASHER 6X12X1.5	T4006012	2
11	TORNILLO 6X45 / SCREW 6X45	T0206045	2
12	PLACA REF GUIA CADENA / REINFORCEMENT PLATE FOR CHAIN GUIDE	BC250412032	1
13	GUIA CADENA / CHAIN GUIDE	BE420002511	1
14	TUERCA AUTOBLOC. M-6 / SELF-LOCK NUT M-6	T2206002	2
15	GOMA PROTECTOR BASCULANTE / SWINGARM PROTECTION RUBBER	BE25836005	4
16	TENSOR RUEDA / WHEEL TENSOR	BE250418022	2
17	TUERCA / NUT	M01613001	2
18	MUELLE TENSOR RUEDA TRAS. / REAR WHEEL TENSOR SPRING	BE250718122	1
19	TAPON BASCULANTE / SWINGARM CAP	BE250436001	4
20	TORNILLO ULS 5X12 / ULS SCREW 5X12	T0505012	4
21	SUJ.LATIG.SOBRE BASC. / HOSE HOLDER	BE25612006	2
22	PATIN CADENA / CHAIN SLIDER	BE420502508	1
23	TORNILLO ALLEN 6 X 100 / ALLEN SCREW 6X100	T03060100	1
24	ARANDELA 6X18X1.5 / WHASER 6X18X1.5	T4006018	2
25	TUERCA AUTOBL. M-6 / SELF-LOCK NUT M-6	T2106002	1
26	PROTECTOR CADENA / CHAIN PROTECTION	BE250328011	1
27	TORNILLO ULS 6X16 / ULS SCREW 6X16	T0506016	1
28	DISTANCIADOR CUBRECADENA / CHAIN PROTECTOR SPACER	BE250720106	1
29	ARANDELA PLANA 6X12X1.5 / FLAT WASHER 6X12X1.5	T4006012	2
30	PROTECTOR PIÑON PLASTICO / SPROCKET PLASTIC PROTECTOR	BE486002508	1
31	PLATINA PROTECTOR PIÑON / SPROCKET PLATE PROTECTOR	ME25636021	1
32	CASQUILLO DISTANCIADOR PIÑON / SPROCKET SPACER BUSH	ME250036019	2
33	TORNILLO ALLEN 6x45 / ALLEN SCREW 6X45	T0306045	2

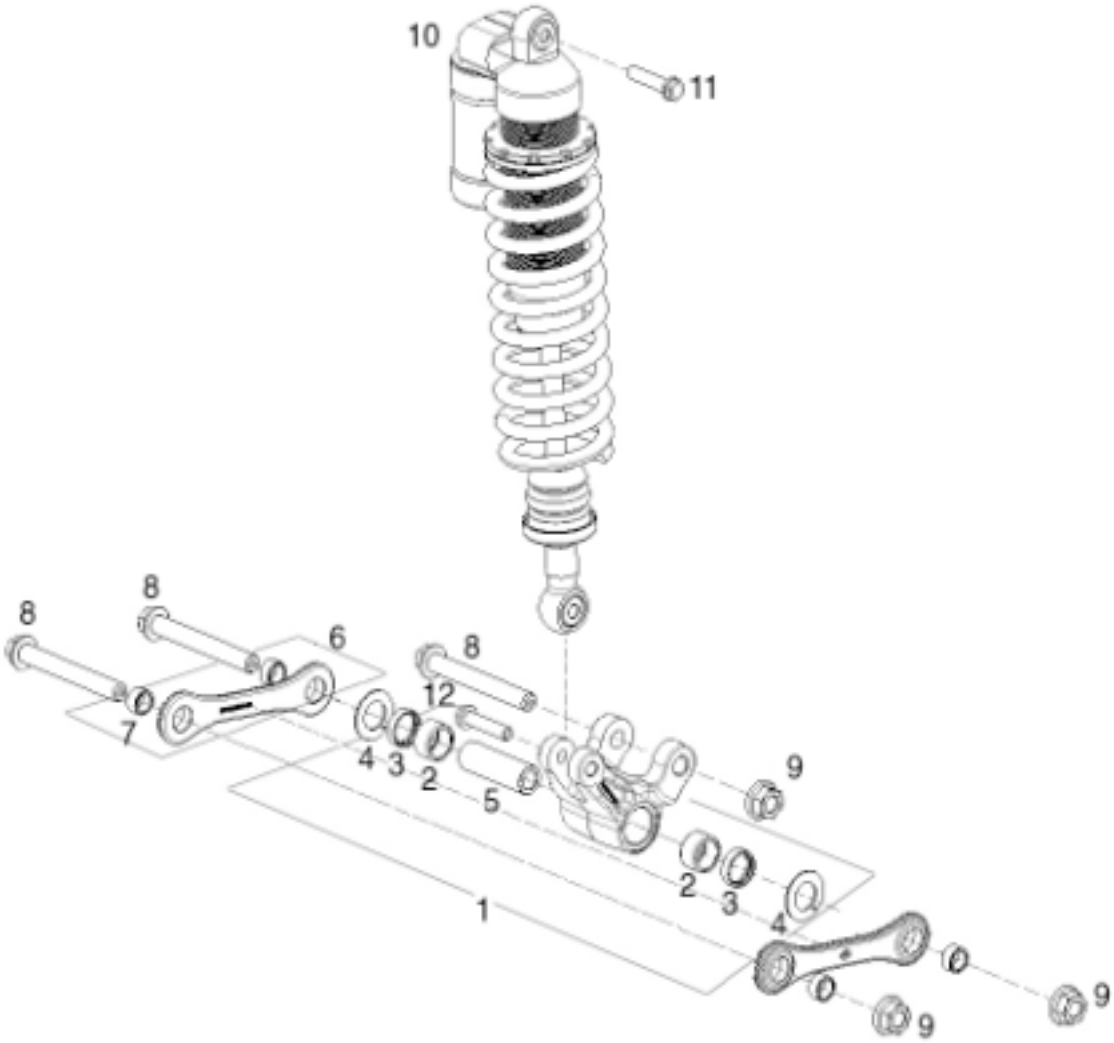
10
11
8
8
8
6
7
12
4
3
2
5
9
2
3
4
1
9
9

Nº	DESCRIPCION / DESCRIPTION	125	Cant.
1	CTO.BALANCIN / ROCKER ARM ASSY	BE32000NCT3011	1
2	JAULA AGUJAS / NEEDLE BEARING	BE25614010	2
3	RETEN DIAM.28X22X8 / SEAL DIAM. 28X22X8	BE32025N3011	2
4	ARANDELA IGLIDUR G / IGLIDUR G WASHER	T4003822	2
5	EJE / SHAFT	BE32020N3011	1
6	CTO. BIELETA / CONNECTING ROD ASSY	BE34000N3013	2
7	CASQUILLO BIELETA / CONNECTING ROD BUSH	BE25642002	4
8	TORNILLO M14X110 / SCREW M14X110	T0214110R	3
9	TUERCA / NUT	BE25612009	3
10	AMORTIGUADOR ÖHLINS EC 125 / ÓHLINS EC 125 SHOCK ABSORBER	BE300001213	1
11	TORNILLO M10X45 / SCREW M10X45	T0210045	1
12	TORNILLO M10X40 / SCREW M10X40	T0110042	1

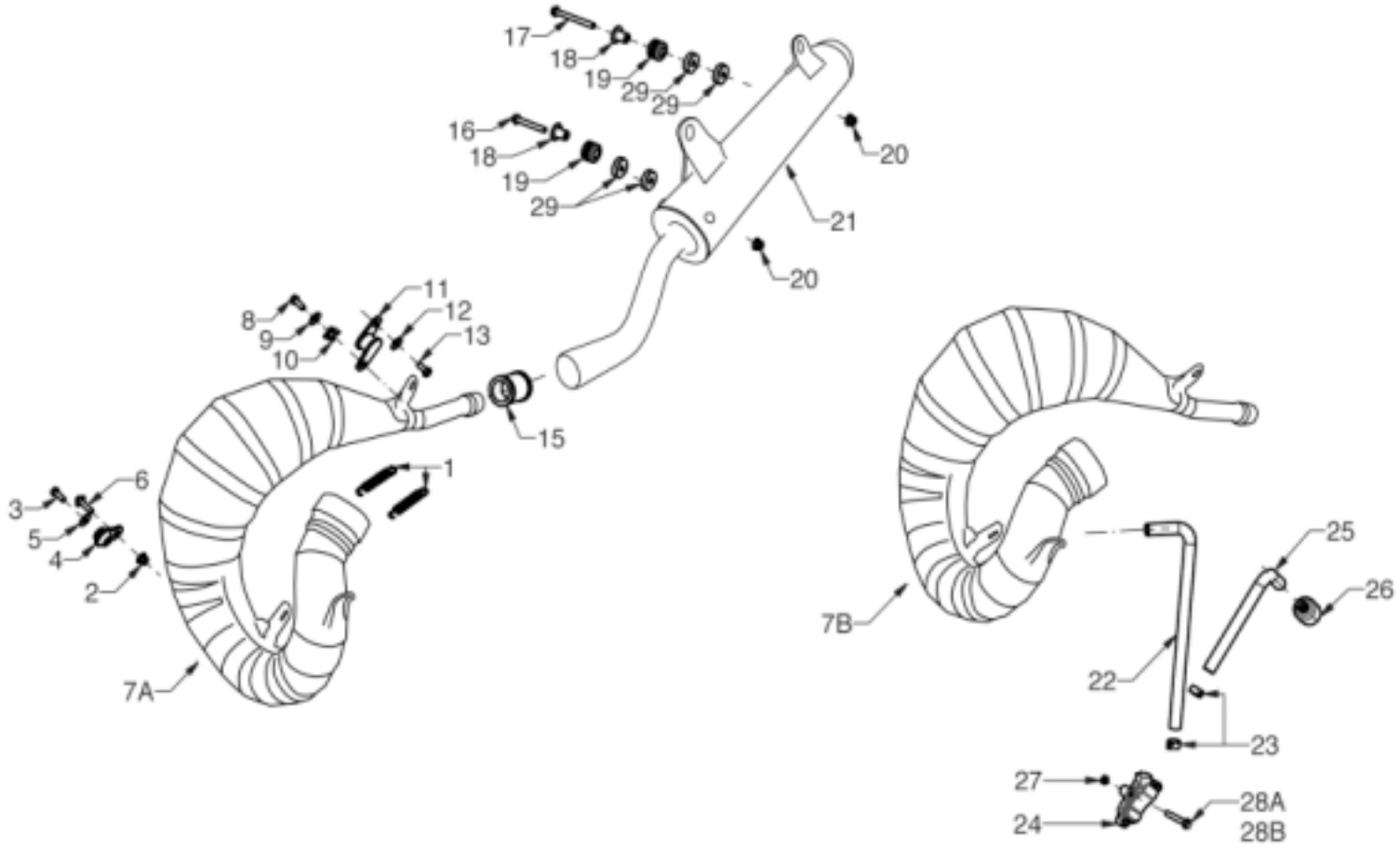
17
18
19
29
29
16
18
19
29
20
21
20
11
12
13
8
9
10
15
1
6
3
5
4
2
7A
7B
25
26
22
23
27
24
28A
28B

Nº	DESCRIPCION / DESCRIPTION	125	Cant.
1	MUELLE / SPRING	BE25610042	2
2	TUERCA M6 / NUT M6	T2206002	1
3	TORNILLO M6 X 16 / SCREW M6 X 16	T0206016	1
4	SILENBLOC / SILENTBLOCK	BIC050526004	1
5	ARANDELA D6 / WASHER D6	T4006018	1
6	TORNILLO M6 X 20 / SCREW M6 X 20	T0606020	1
7A	TUBO DE ESCAPE / EXHAUST PIPE	BE850001213	1
7B	TUBO DE ESCAPE HOMOLOGADO / EXHAUST PIPE (HOMOLG.)	BE85000H1208	1
8	TORNILLO M6 X 16 / SCREW M6 X 16	T0206016	1
9	ARANDELA D6 / WASHER D6	T4006018	1
10	TUERCA M6 / NUT M6	T2606000	1
11	SILENBLOC / SILENTBLOCK	BE25626004	1
12	ARANDELA D6 / WASHER D6	T4006018	1
13	TORNILLO M6 X 20 / SCREW M6 X 20	T0206020	1
15	JUNTA ESCAPE / GASKET	BE25626003	1
16	TORNILLO M6 X 55 / SCREW M6 X 55	T0206055	1
17	TORNILLO M6 X 60 / SCREW M6 X 60	T0206060	1
18	CASQUILLO / BUSH	BE250026000	2
19	SILENBLOC / SILENTBLOCK	BE250026005	2
20	TUERCA M6 / NUT M6	T2206002	2
21	SILENCIOSO / FINAL SILENCER	BE870001213M	1
22	TUBO AIRE SECUNDARIO LARGO / LONG SECONDARY AIR HOSE (HOMOLOG.)	BE785551209	1
23	ABRAZADERA 15 / CLAMP 15 (HOMOLOG.)	L200053	2
24	VALVULA AIRE SECUNDARIO / SECONDARY AIR VALVE (HOMOLOG.)	BE785652509	1
25	TUBO AIRE SECUNDARIO CORTO / SHORT SECONDARY AIR HOSE (HOMOLOG.)	BE785502509	1
26	FILTRO AIRE SECUNDARIO / SECONDARY AIR FILTER (HOMOLOG.)	BT280626059	1
27	CASQUILLO / BUSH (HOMOLOG.)	BC250014050	1
28A	TORNILLO M6 X 30 / SCREW M6 X 30	T0206030	1
28B	TORNILLO M6 X 45 / SCREW M6 X 45 (HOMOLOG.)	T0206045	1
29	CASQUILLO / BUSH	T90062250007K	4

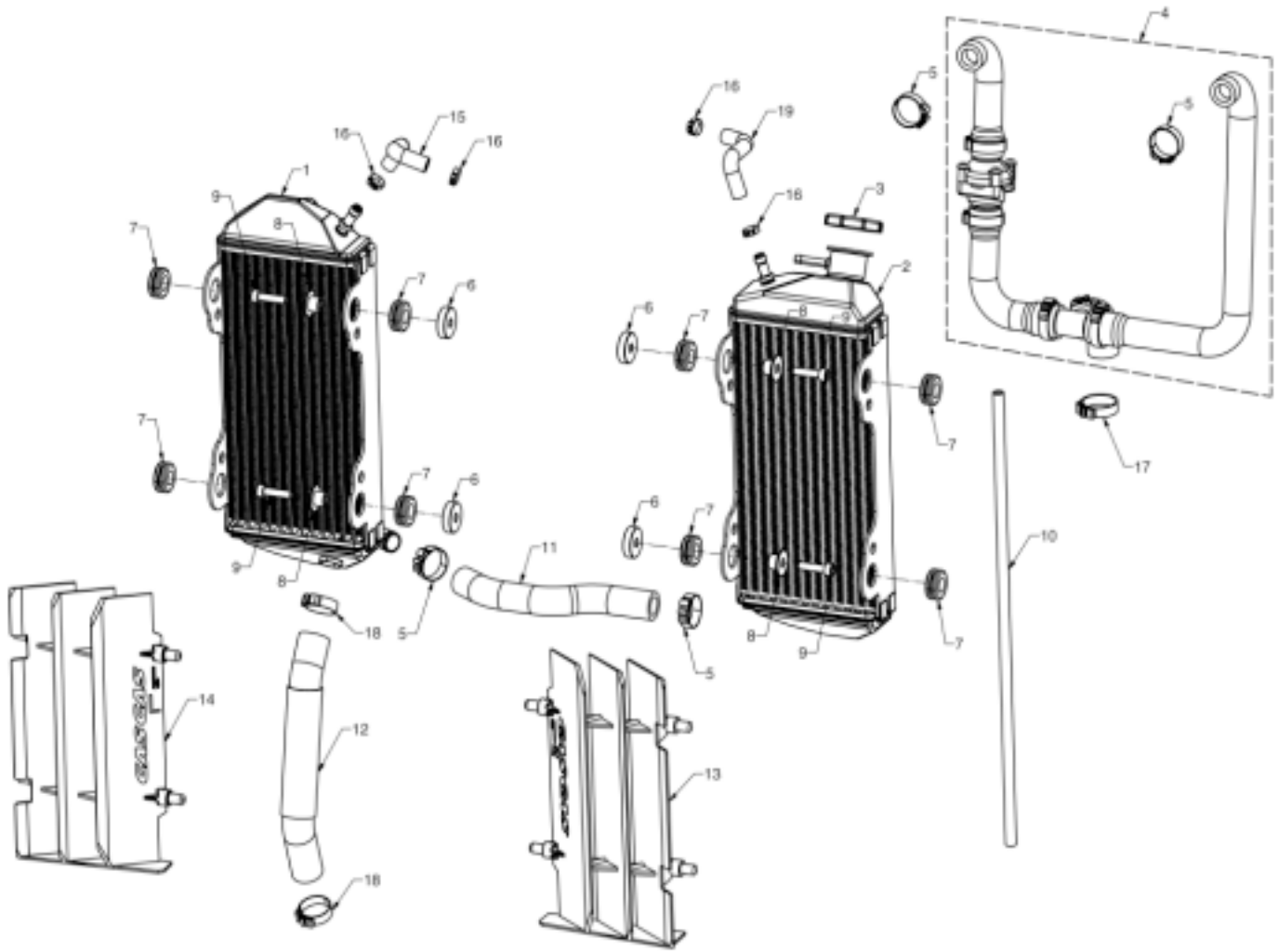
1
2
3
4
5
6
7
8
9
10
11
12
13
14
15
16
17
18
19

Nº	DESCRIPCION / DESCRIPTION	125	Cant.
1	RADIADOR DERECHO / RIGHT RADIATOR	BE120732000	1
2	RADIADOR IZQUIERDO CON TAPÓN / LEFT RADIATOR WITH CAP	BE700501211	1
3	TAPÓN RADIADOR / RADIATOR CAP	L200110	1
4	CTO.TUBO RADIADOR A CULATA / RADIATOR TO CYL.HEAD HOSE SET	BE710501213	1
5	ABRAZADERA 22 / 22 CLAMP	L200038	4
6	CASQUILLO / BUSH	T90062250007K	4
7	SILENBLOC / SILENTBLOCK	BE500132031	8
8	CASQUILLO / BUSH	BE25832040	4
9	TORNILLO M6 x 25 / SCREW M6 x 25	T0306025	4
10	TUBO SOBRANTE / VENT HOSE	B25632009	1
11	TUBO CONEXIÓN RADIADORES / HOSE CONNECTION RADIATORS	BE710151213	1
12	TUBO INFERIOR RADIADOR DERECHO / RIGHT RADIATOR LOWER HOSE	BE120132006	1
13	REJILLA RADIADOR IZQUIERDO BLANCA / LEFT WHITE RADIATOR PROTECTION	BE250720001	1
14	REJILLA RADIADOR DERECHO BLANCA / RIGHT WHITE RADIATOR PROTECTION	BE250720002	1
15	TUBO SUPERIOR RADIADOR DERECHO / RIGHT RADIATOR UPPER HOSE	BE70000013012	1
16	ABRAZADERA 12 / 12 CLAMP	MFS400110031	4
17	ABRAZADERA 26 / 26 CLAMP	BE120132051	1
18	ABRAZADERA 25 / 25 CLAMP	L200051	2
19	TUBO SUPERIOR RADIADOR IZQUIERDO / LEFT RADIATOR UPPER HOSE	BE70000023012	1

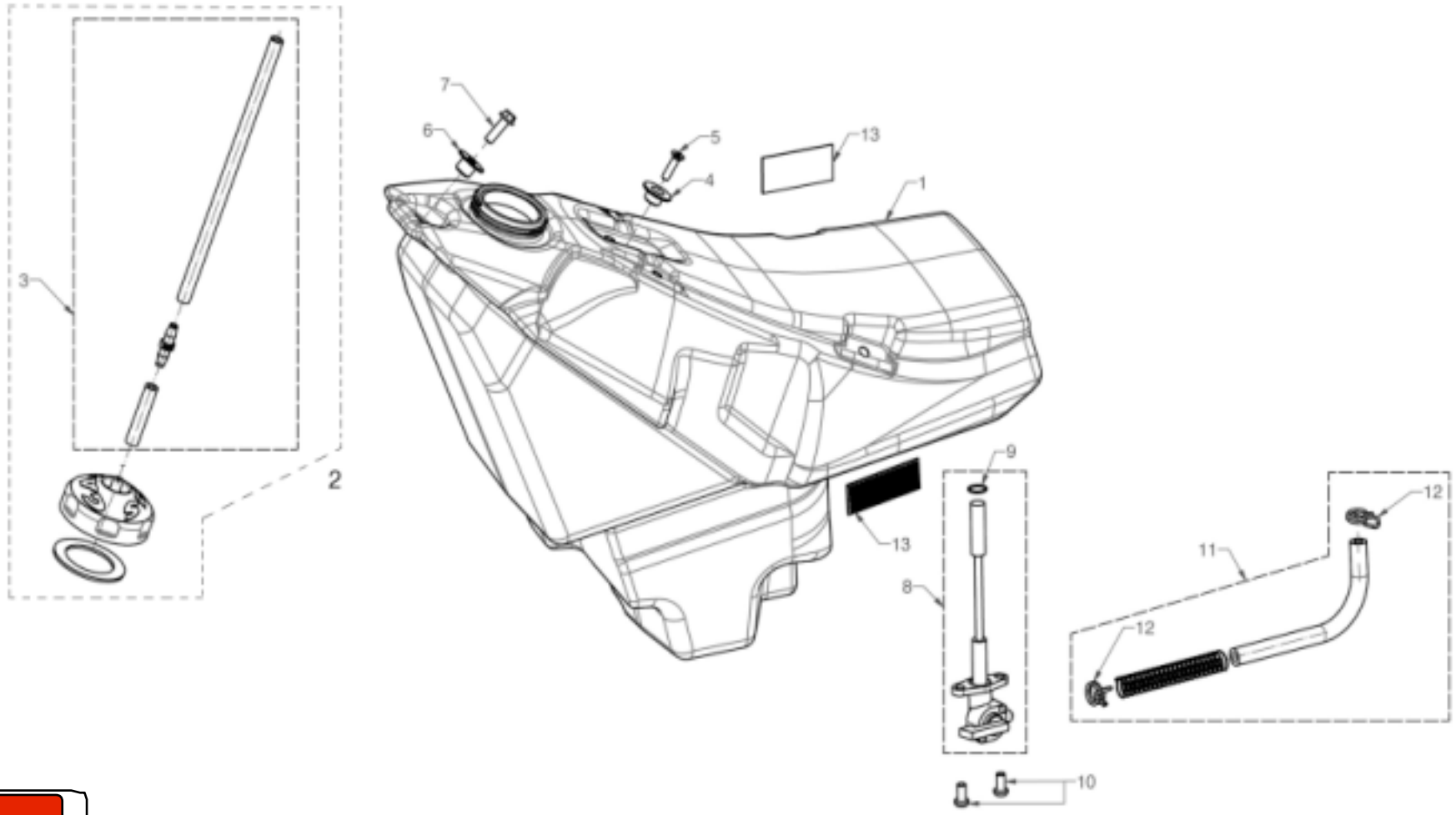
7
6
5
4
13
1
3
2
9
13
8
12
11
12
10

Nº	DESCRIPCION / DESCRIPTION	125	Cant.
1	DEPOSITO GASOLINA 2013 / FUEL TANK 2013	BE760003013	1
2	TAPON / CAP	BE250520010CT	1
3	CTO. TUBO DESVAPORIZADOR / VENT HOSE ASSY	BT280310018	1
4	CASQUILLO DEPÓSITO BASE ASIENTO 2013 / BUSH	BE761053013	1
5	TORNILLO M5 X 20 / SCREW M5 X 20	T0405020	1
6	CASQUILLO / BUSH	BE25832040	1
7	TORNILLO M6 X 20 / SCREW M6 X 20	T0206020	1
8	GRIFO GASOLINA / FUEL TAP	BE760202510	1
9	TORICA 10 X 2,5 / O-RING 10 X 2,5	B740120	1
10	TORNILLO M6 X 12 / SCREW M6 X 12	T0506012	2
11	TUBO GASOLINA / FUEL HOSE	BE780051213	1
12	ABRAZADERA / CLAMP	BE25610044	2
13	CINTA DE CIERRE ADHESIVA / ADHESIVE LOCKING TAPE	BE90000413012	2

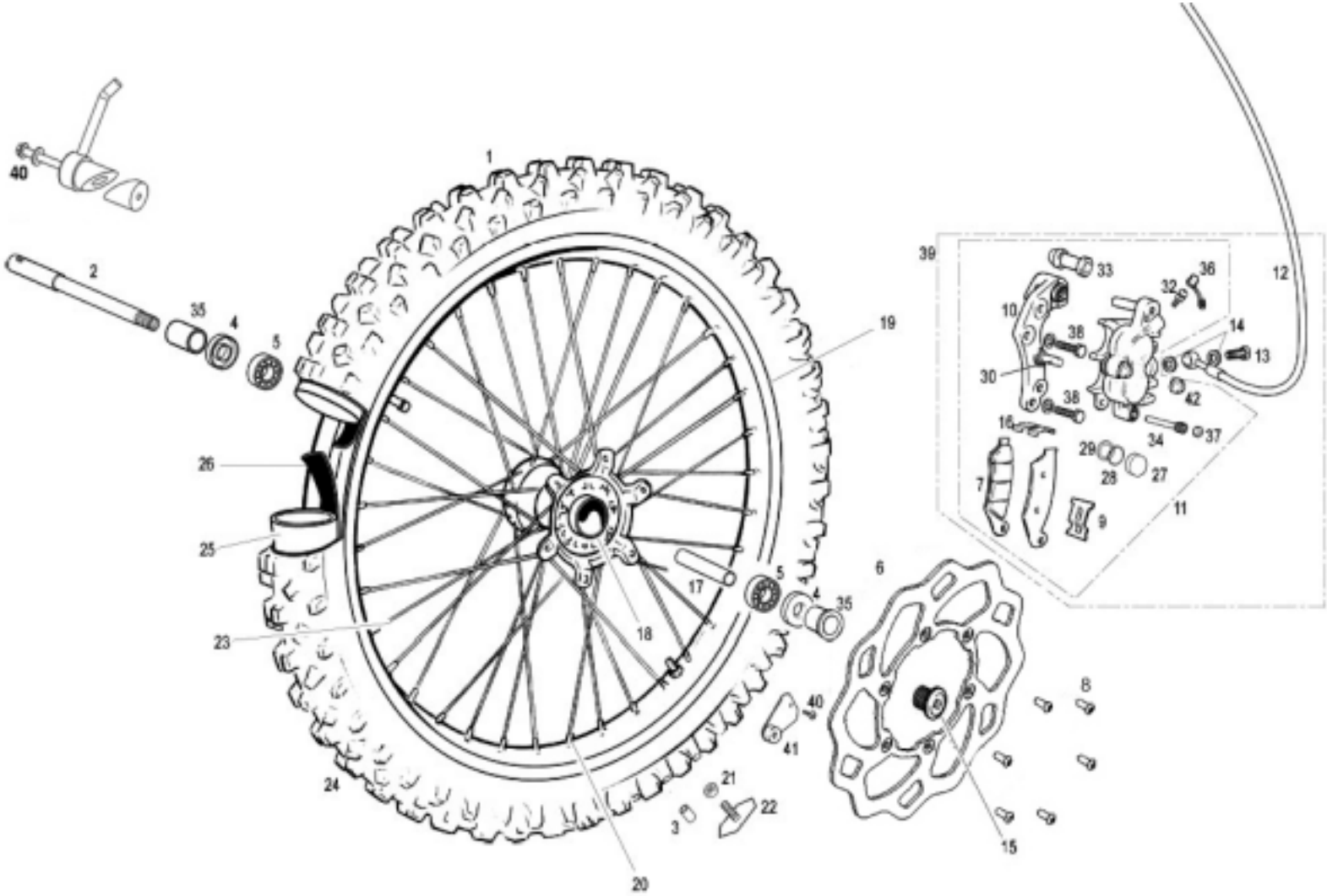
40
2
35
4
5
26
25
23
24
1
19
18
17
20
5
4
35
6
40
41
21
22
3
15
8
39
33
36
32
12
10
38
14
13
30
38
42
16
34
37
29
28
27
7
9
11

Nº	DESCRIPCION / DESCRIPTION	125	Cant.
1	RUEDA DELANTERA (LLANTA+RADIOS+CUBO) / FRONT WHEEL (RIM+SPOKES+HUB)	BE500000CT2511	1
2	EJE RUEDA DELANTERA / FRONT WHEEL AXIS	BC250718017	1
3	CASQUILLO AGARRE CUBIERTA DELANTERA / FRONT TIRE HOLDING BUSHING	BE555102510	1
4	RETÉN CUBO DELANTERO 30X42X7 / 30X42X7 FRONT WHEEL GASKET	BE250418057	2
5	COJINETE 6905 2RSR / BEARING	ME120136055	2
6	DISCO FRENO DELANTERO / FRONT BRAKE DISC	BE520002509	1
7	PASTILLAS DE FRENO DELANTERO / FRONT BRAKE PADS KIT	BE620652508	1
8	TORNILLO M6 X 14 / SCREW M6 X 14	T0566014	6
9	PLATINA (A) SUJ. PASTILLAS DEL. / FRONT BRAKE PADS HOLDER BRACKET (A)	BE620112508	1
10	SOPORTE PINZA DELANTERO / FRONT CALIPER SUPPORT	BE620102508	1
11	PINZA FRENO DELANT. / FRONT BRAKE CALIPER	BE250722000	1
12	LATIGUILLO FRENO DELANTERO / FRONT BRAKE HOSE	BE250422002	1
13	RACORD SUJ. LATIGUILLO 10X1,25 / HOSE HOLDER RACORD 10X1.25	BC25722006	1
14	ARANDELA LATIGUILLO 10X14X1 / HOSE WASHER 10X14X1	BE25622007	2
15	TORNILLO EJE RUEDA DELANTERA / FRONT WHEEL AXIS BOLT	BE250718026	1
16	PLATINA (B) SUJ. PASTILLAS DELANT. / FRONT BRAKE PADS HOLDER BRACKET (B)	BE620122508	1
17	DISTANCIADOR / SPACER	BE250418058	1
18	CUBO RUEDA DELANTERO SEP. INT. ALUM. / FRONT WHEEL HUB	BE250418007	1
19	LLANTA 1,60X21 / RIM 1.60X21	BE54001R2509	1
20	TUERCA RADIO DELANTERO / FRONT SPOKE NUT	BE250218010	36
21	TUERCA AUTOBLOCANTE M8 BAJA / M8 NUT SELF-LOCKING LOWER	T2108001	1
22	AGARRE CUBIERTA DELANTERA / FRONT TIRE HOLDER	BE505002509	1
23	RADIO DELANTERO 243X3,5 / FRONT SPOKE 243X3.5	BE542012508	36
24	NEUMÁTICO DELANTERO 90/90-21 / FRONT TIRE 90/90-21	BE501002511	1
25	CÁMARA DELANTERA / FRONT AIR HOSE	BE502002511	1
26	PROTECTOR BANDA DELANTERA / FRONT RIM BAND	BE503002511	1
27	KIT REPARACIÓN PISTONES / PISTON REPARATION SET	BE620422508	4
32	KIT SANGRADOR / BLEEDER SET	BE620602508	1
33	PROTEC. TORNILLO PINZA FRENO DEL. / FRONT BRAKE CALIPER BOLT PROT.	BE620682508	1
35	CASQUILLO RUEDA DELANTERA / FRONT WHEEL BUSHING	BC250418019	2
39	CTO. FRENO DELANTERO PURGADO / FRONT BRAKE SET	BE250422108	1
40	TIRADOR EJE DELANTERO / FRONT AXLE PULLER	BE536002511	1
41	TORNILLO M4 x 10 / SCREW M4 x 10	T0554010N	1
42	IMAN / MAGNET	BP120734008CT	1

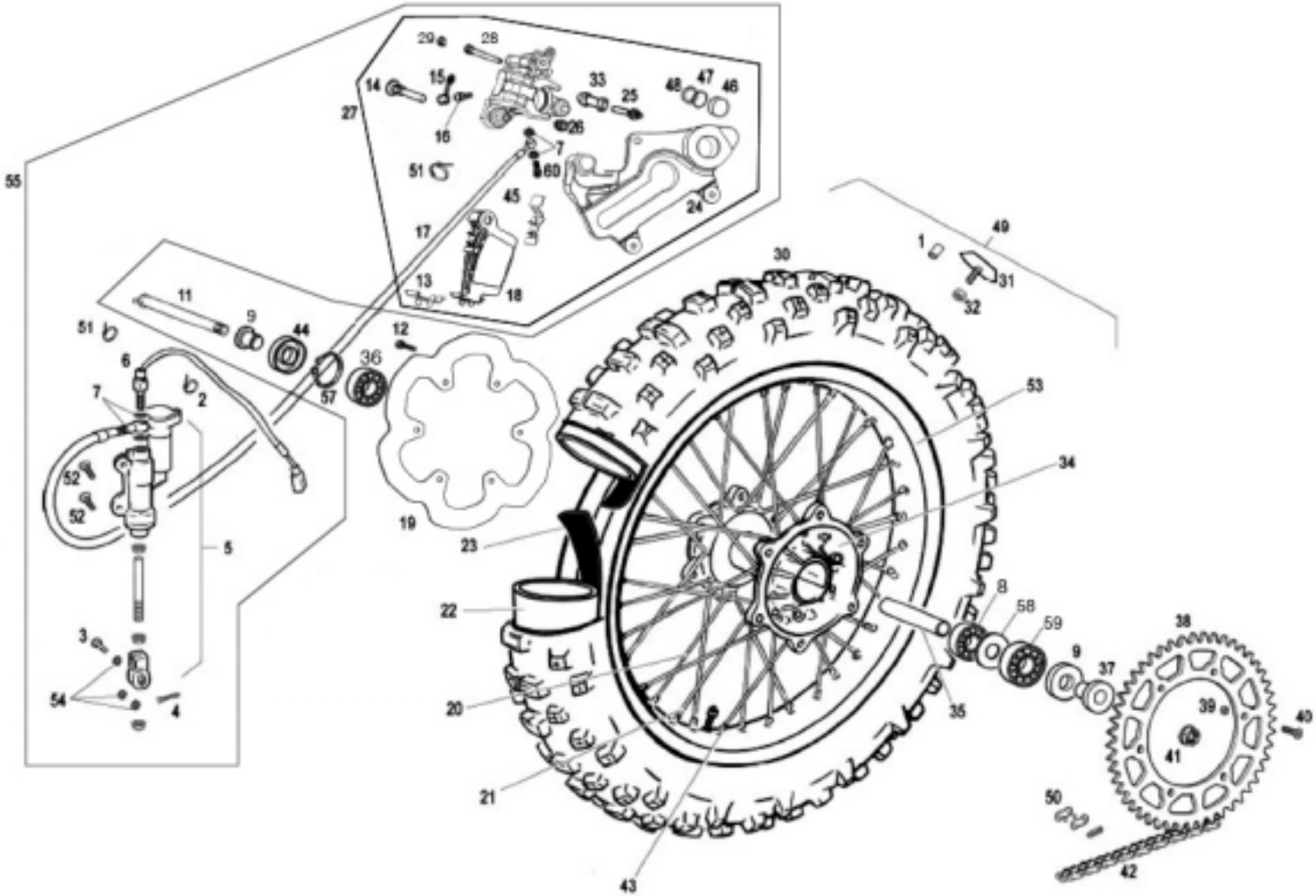
29
28
14
15
33
25
48
47
46
27
16
26
7
51
60
45
24
55
17
13
18
1
49
31
32
30
11
9
44
12
36
51
6
7
2
57
53
34
52
52
19
23
5
22
8
58
59
38
3
9
37
54
4
20
35
39
40
41
21
50
42
43

Nº	DESCRIPCION / DESCRIPTION	125	Cant.
1	CASQUILLO AGARRE CUBIERTA DELANTERA / FRONT TIRE HOLDING BUSHING	BE555102510	1
2	BRIDA UNEX 2244 16/102 4.8X36 / CLAMP 2244 16/102 4.8X36	BE25634007	1
3	PASADOR 8X20 PEDAL FRENO / BRAKE PEDAL PIN 8X20	BE25622026	1
4	CLAVILLA PASADOR FRENO 2X20 / BRAKE PEDAL PIN STOPPER	BE25622027	1
5	BOMBA FRENO TRASERO NISSIN / NISSIN REAR BRAKE PUMP	BE660002509	1
6	INTERRUPTOR STOP BOMBA NISSIN / NISSIN BRAKE PUMP STOP SWITCH	BE250334003	1
7	ARANDELA LATIGUILLO 10X14X1 / HOSE WASHER 10X14X1	BE25622007	4
8	COJINETE 9204 2RSR / BEARING 6204 2RSR	C180700	1
9	RETÉN RUEDA TRASERA / REAR WHEEL SEAL	BE250318055	1
10	DISTANCIADOR RUEDA TRASERA CORTO / SHORT REAR WHEEL SPACER	BE250018025	1
11	EJE RUEDA TRASERA / REAR WHEEL AXIS	BE25618020	1
12	TORNILLO HEXAGONAL 6X16 DISCO TRAS. / R. DISC BRAKE HEX. SCREW 6X16	T0206014	6
13	PLATINA (A) SUJ. PASTILLAS TRAS. / REAR BRAKE PADS HOLDER BRACKET (A)	BE620112508	1
14	TORNILLO SUJECIÓN PINZA / CALIPER HOLDER SCREW	BE250022096	1
15	TAPÓN SANGRADOR / BLEEDER CAP	BE250022055	1
16	SANGRADOR / BLEEDER	BE250022060	1
17	LATIGUILLO FRENO TRASERO NISSIN / NISSIN REAR BRAKE HOSE	BE661002509	1
18	PASTILLAS DE FRENO TRASERO NISSIN / NISSIN REAR BRAKE PADS KIT	BE675002509	1
19	DISCO FRENO TRASERO / REAR BRAKE DISC	BE570002509	1
20	RADIO 192X4,5 LADO FRENO 18” / 18” BRAKE-SIDE SPOKE 192X4.5	BE250018015	18
21	RADIO 188X4,5 LADO CORONA 18” / 18” SPROCKET-SIDE SPOKE 188X4.5	BE250018014	18
22	CAMARA TRASERA 18 CR / REAR AIR HOSE 18 CR	BE552002511	1
23	PROTECTOR BANDA TRASERA 18 / REAR RIM BAND	BE553002511	1
24	SOPORTE PINZA TRASERA / REAR CALIPER SUPPORT	BE671002509	1
25	TORNILLO CLAVIJA PINZA FRENO / BRAKE CALIPER BOLT	BE250022034	1
26	GUARDAPOLVO / DUST COVER	BE675802509	1
27	PINZA FRENO TRASERO / REAR BRAKE CALIPER CTO.	BE67000CT2509	1
28	PASADOR PASTILLAS / BRAKE PADS PIN	BE250022094	1
29	PROTECCCION PASADOR / PIN PROTECTION	BE250022095	1
30	NEUMÁTICO TRASERO 140/80-18 / REAR TYRE 140/80-18	BE551002511	1
31	AGARRE CUBIERTA TRASERA / REAR TYRE HOLDER	BE555002509	1
32	TUERCA AUTOBLOCANTE M8 BAJA / SELF-LOCKING NUT M8	T2108001	1
33	PROTECTOR TORNILLO / SCREW PROTECTOR	BE250022039	1
34	CUBO RUEDA TRASERA / REAR WHEEL HUB	BE250318027	1

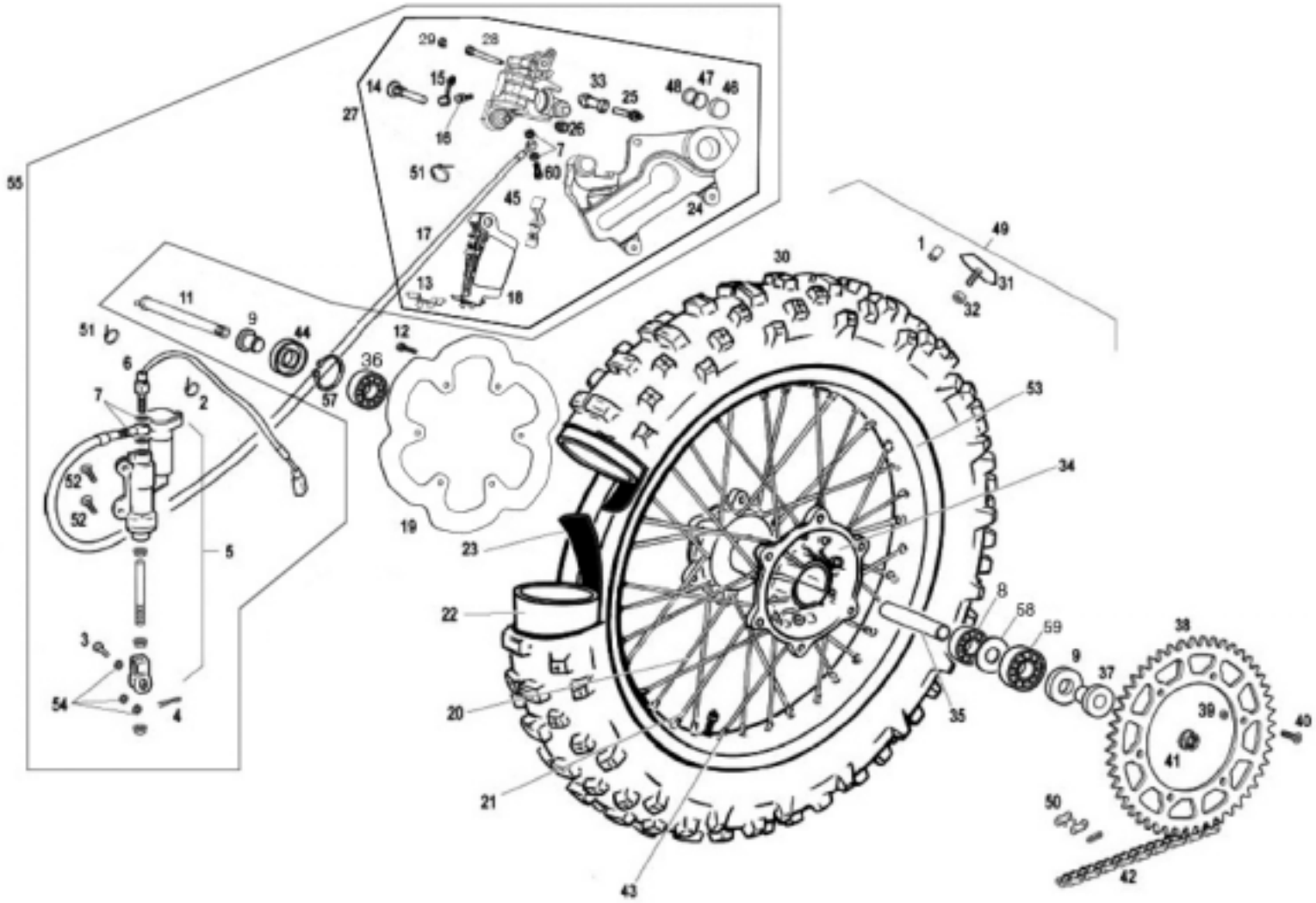
29
28
14
15
33
25
48
47
46
27
16
26
7
51
60
45
24
55
17
13
18
1
49
30
31
32
11
9
44
12
36
51
6
7
57
53
34
52
52
19
23
5
22
8
58
59
38
9
37
3
39
54
4
20
35
40
41
21
50
42
43

Nº	DESCRIPCION / DESCRIPTION	125	Cant.
35	DISTANCIADOR RUEDA TRASERA INTE. / REAR WHEEL SPACER	R575700	1
36	COJINETE 6004 2RSR / BEARING 6004 2RSR	C160001	1
37	DISTANCIADOR RUEDA DELANTERA LARGO / LONG WHEEL SPACER	BE250318021	1
38	CORONA Z50 ORO / Z50 GOLD SPROCKET	BE573003013	1
39	TUERCA AUTOBLOCANTE M8 ALTA / HIGH SELF-LOCKING SPROCKET NUT M8	T2208002	6
40	ALLEN CÓNICO 8X30 / CONIC ALLEN BOLT 8X30	T0408030	6
41	TUERCA AUTOBLOCANTE RUEDA TRASERA / REAR WHEEL SELF-LOCKING NUT	BE25618023	1
42	CADENA Rx3 114 LINKS / Rx3 114 LINKS CHAIN	BE578001213	1
43	TUERCA RADIO TRASERO / REAR SPOKE NUT	BE250018016	36
45	PLATINA (B) SUJ. PAST. TRASERAS / REAR BRAKE PADS HOLDER BRACKET (B)	BE620122508	2
46	PISTÓN PINZA FRENO TRASERO / REAR BRAKE CALIPER PISTON	BE675602509	2
47	RETÉN PISTÓN PINZA FRENO TRASERO / REAR BRAKE CALIPER PISTON O'RING	BE675502509	2
48	TÓRICA PISTÓN PINZA FRENO TRASERO / REAR BRAKE CALIPER PISTON SEAL	BE250022048	2
49	RUEDA TRASERA / REAR WHEEL SET	BE55000CT2511	1
50	ENGANCHE CADENA / CHAIN SPLIT LINK	BE250310066	1
51	BRIDA UNEX CORTA / SHORT CLAMP	BE25634010	3
52	ULS 6X20 CON ARANDELA PLATA / 6X20 ULS WITH WASHER	T0506015	2
53	LLANTA 2.15X18 / RIM 2.15X18	BE59001R2509	1
54	ARANDELA 8X16X1 / 8X16X1 WASHER	T4008018	3
55	CTO. FRENO TRASERO / REAR BRAKE SET	BE65000CT2509	1
56	CASQUILLO SEPARADOR BOMBA FRENO TRASERO / SPACER BRAKE BUSHING	BT120222097	1
57	SEEGER DIÁMETRO 42 / 42 DIAMETER SEEGER	BE25618038	1
58	ARANDELA INTERIOR CUBO / INTERIOR HUB WASHER	BE250318056	1
59	COJINETE RUEDA 6005-25R1 C3 / WHEEL BEARING	BE250318054	1
60	RACORD SUJ. LATIGUILLO 10X1,25 / HOSE HOLDER RACORD 10X1.25	BC25722006	1

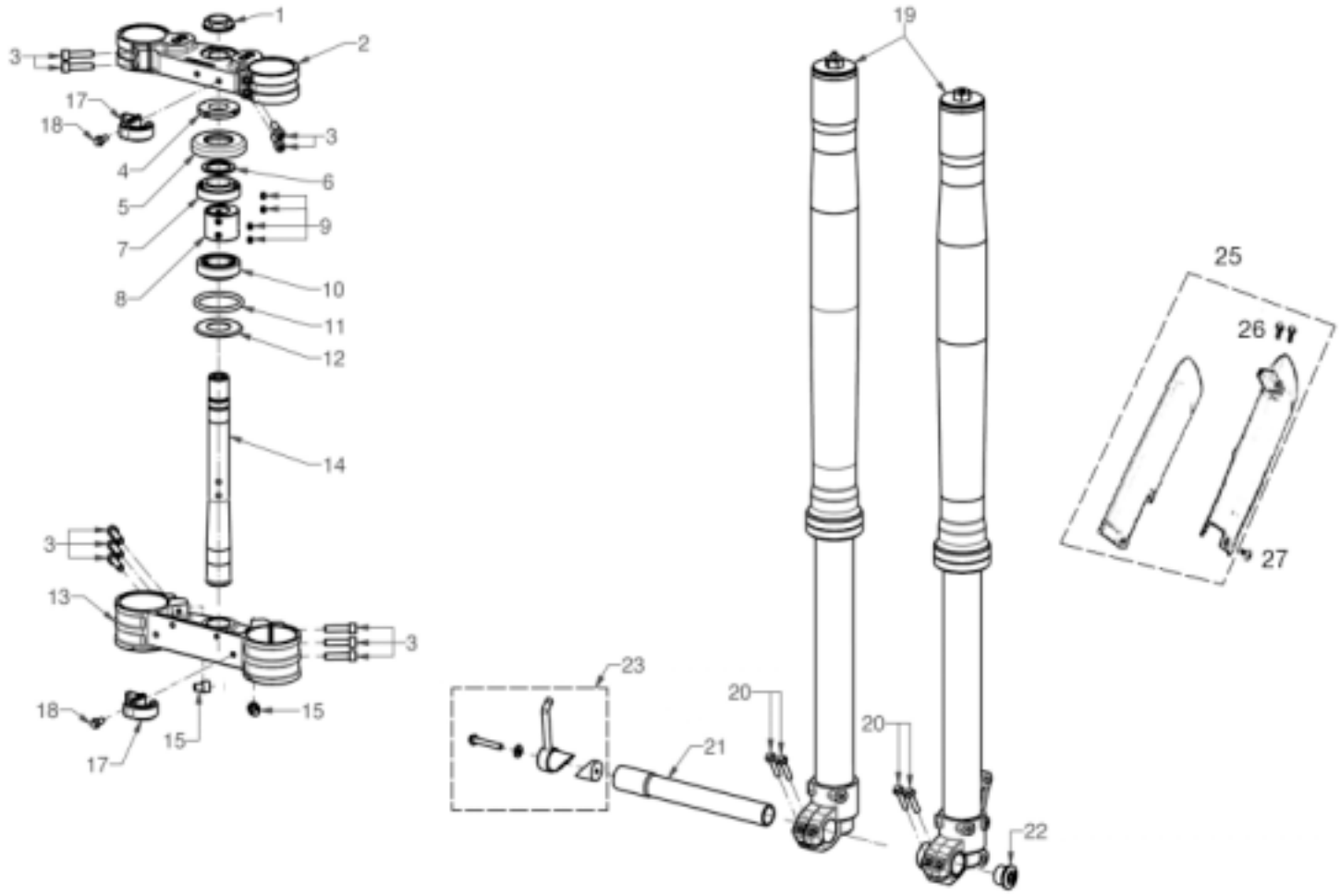
1
2
3
17
18
3
4
6
5
9
7
8
10
11
12
14
3
13
3
18
15
15
17
19
25
26
27
23
20
20
21
22

Nº	DESCRIPCION / DESCRIPTION	125	Cant.
1	TUERCA DIRECCION SUPERIOR / TOP STEERING NUT	BE25610030	1
2	BRIDA SUPERIOR SUSPENSION / TOP FORK CLAMP	BE220002510	1
3	TORNILLO M7 X 30 / SCREW M7 X 30	T0307030	10
4	TUERCA DIRECCION INFERIOR / BOTTOM STEERING NUT	BE25610029	1
5	GUARDAPOLVO / STEERING HEAD COVER	BE25610126	1
6	ARANDELA DIRECCION INFERIOR / BOTTOM STEERING WASHER	BE25610028	1
7	COJINETE DIRECCION SUPERIOR / TOP STEERING BEARING	BE25610008	1
8	CASQUILLO CLAUSOR / LOCKING BUSH	BE20000033012	1
9	TORNILLO PRISIONERO M6 X 8 / SCREW M6 X 8	BE250310073	4
10	COJINETE DIRECCION INFERIOR / BOTTOM STEERING BEARING	BE250610008	1
11	TORICA 50 X 5 / O-RING 50 X 5	BE25610012	1
12	CAZOLETA DIRECCION / O-RING SUPPORT	BE250610026	1
13	BRIDA INFERIOR SUSPENSION / BOTTOM FORK CLAMP	BE210001210	1
14	EJE DIRECCION / STEERING SHAFT	BE250614003	1
15	TORNILLO M8 X 10 / SCREW M8 X 10	T0318010	2
17	GUIA LATIGUILLO / HOSE GUIDE	BE215202511	2
18	TORNILLO M6 X 14 / SCREW M6 X 14	T0206014	2
19	SUSPENSION DELANTERA MARZOCCHI / MARZOCCHI FRONT SUSPENSION	BE200001213	1
20	TORNILLO M6 X 30 / SCREW M6 X 30	T0206030	4
21	EJE RUEDA DELANTERA / FRONT WHEEL SPINDLE	BC250718017	1
22	TORNILLO EJE RUEDA DELANTERA / SPINDLE SCREW	BE250718026	1
23	CJTO. TIRADOR EJE DELANTERO / PULLER ASSY.	BE536002511	1
25	PROTECTOR DE HORQUILLA BLANCO / FORK PROTECTOR WHITE	BE94600C2511	1
26	TORNILLO M5 X 20 / SCREW M5 X 20	T0805020	2
27	TORNILLO M6 X 13 / SCREW M6 X 13	T0316013	6

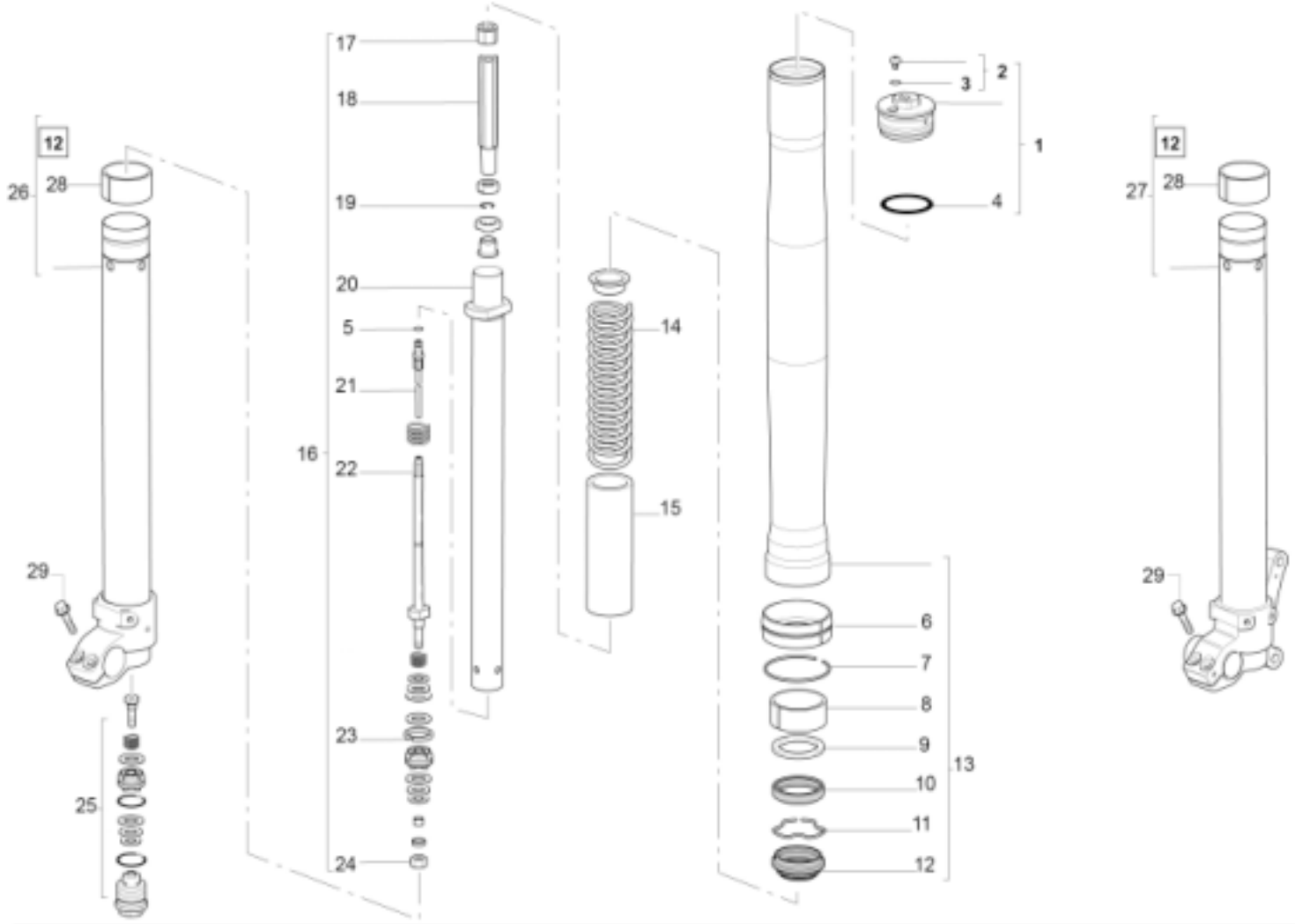
12
26
28
29
25
17
18
19
20
5
21
16
22
23
24
14
15
2
3
1
4
6
7
8
9
10
11
12
13
12
27
28
29

Nº	DESCRIPCION / DESCRIPTION	125	Cant.
1	DIA.45USD / REGLAJE DE PRECARGA		1
2	TORNILLO / SCREW + OR2015	BE25714103	1
3	ARANDELA / OR 2015 (D3.69 S1.78)	BIC060514147	1
4	O-RING	BE250114104	1
5	O-RING		1
6	TUBO DE PLÁSTICO EXTERNO DE PROTECCIÓN / OUTER TUBE PLASTIC PROTECTION	BE250614041	1
7	SEGMENTO / STOP RING	BE250614042	1
8	COJINETE DE FRICCIÓN / OUTER TUBE BUSHING	BE250314131	1
9	ANILLO DE RETENCIÓN / RETAINING CUP FORK D.45	BE250114133	1
10	RETÉN / OIL SEAL 45X58X11 GREASED	C240701	1
11	SEGMENTO / STOP RING	BE25714132	1
12	GUARDAPOLVO / DUST SEAL WITH INSERT.	BE25714131	1
13	CTO. TUBO EXTERNO / OUTER TUBE ASSY		1
14	MUELLE / FORK SPRINGS 45 SHIVER K. 0,40	BE250114268	1
15	TUBO / TUBE		1
16	CTO. INTERIOR HIDRÁULICO / HYDRAULIC SYSTEM ASSY		1
17	TUERCA / NUT		1
18	GUÍA DE PROTECCIÓN / PROTECTION GUIDE		1
19	SEGMENTO / STOP RING	BE250114231	1
20	TUBO HIDRÁULICO / HYDRAULIC TUBE		1
21	TORNILLO REGLAJE RETENCIÓN / REBOUND ADJUSTMENT SCREW		1
22	TUBO DE RETENCIÓN / REBOUND TUBE		1
23	SEGMENTO DE PISTÓN / PISTON RING	BE250114120	1
24	TUERCA / NUT 6MA H6 METABLOC		1
25	CTO. DE COMPRESIÓN HIDRÁULICO / HYDRAULIC COMPRESSION ASSY		1
26	RH STANCH+DROP OUT+BUSH 45		1
27	LH STANCH+DROP OUT+BUSH 45		1
28	COJINETE DE FRICCIÓN / OUTER TUBE BUSHING	BE250114128	1
29	TORNILLO M6x30 / SCREW		4

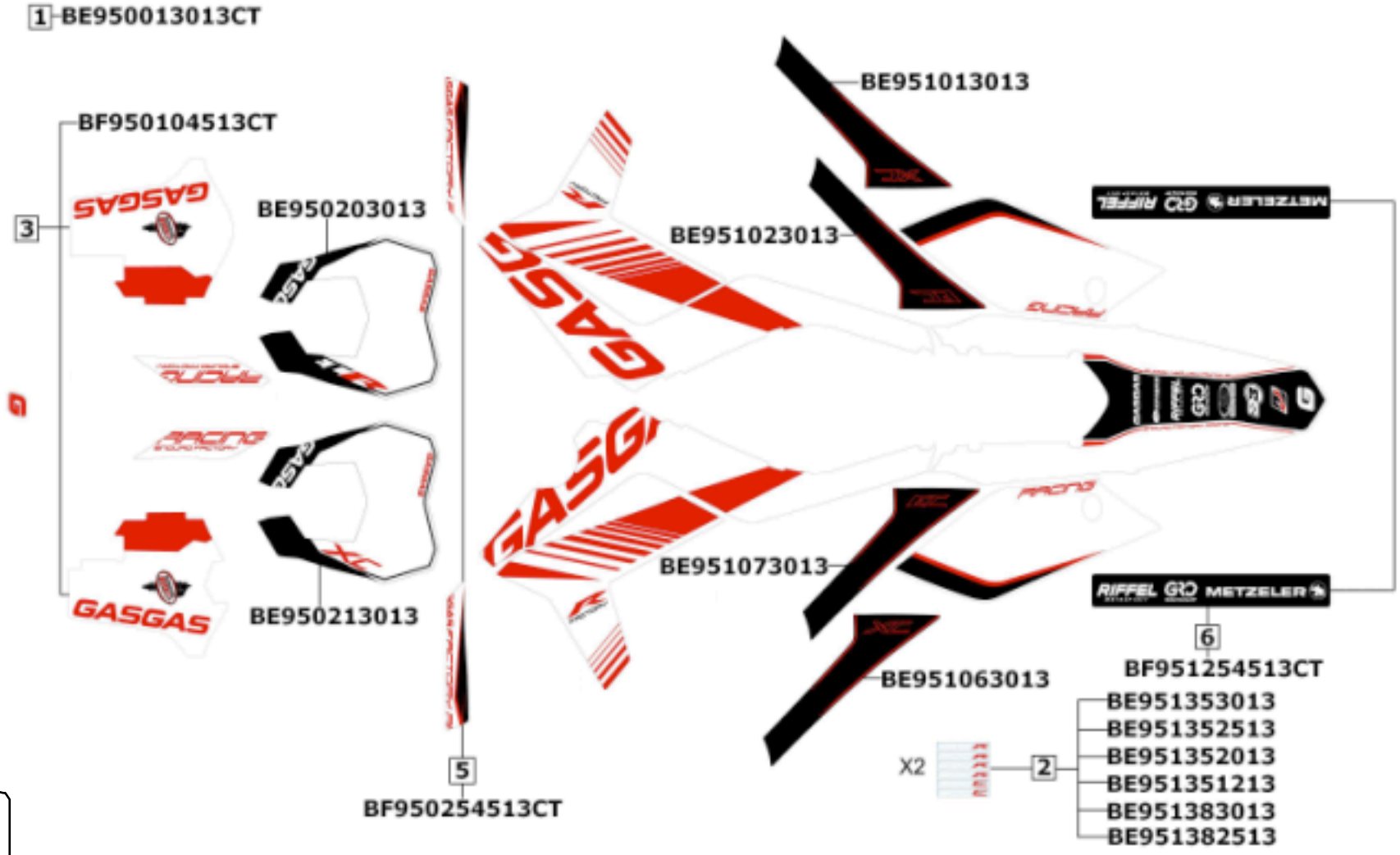
1 BE950013013CT
BF950104513CT
3
BE950203013
BE950213013
BE951013013
BE951023013
BE951073013
BE951063013
5
BF950254513CT
X2
2
BE951353013
BE951352513
BE951352013
BE951351213
BE951383013
BE951382513
6
BF951254513CT

Nº	DESCRIPCION / DESCRIPTION		Cant.
1	KIT ADH. RACING 2013	BE950013013CT	1
2a	ADH.CILINDRADA 300 2013	BE951353013	2
2b	ADH.CILINDRADA 250 2013	BE951352513	2
2c	ADH.CILINDRADA 200 2013	BE951352013	2
2d	ADH.CILINDRADA 300 ELECTRICA 2013	BE951383013	2
2e	ADH.CILINDRADA 250 ELECTRICA 2013	BE951382513	2
2f	ADH.CILINDRADA 125 2013	BE951351213	2
3	KIT ADH. HORQUILLA 2013	BE950104513CT	1
4A	ADH. FARO RACING 2013	BE950203013	1
4B	ADH. FARO XC 2013	BE950213013	1
5	ADH. PARAMANOS	BF950254513CT	1
6	KIT ADH.BASCULANTE 2013	BF951254513CT	1
7a	ADH.PROTECCION CAJA FITRO IZQUIERDO RACING 2013	BE951073013	1
7b	ADH.PROTECCION CAJA FITRO IZQUIERDO XC 2013	BE951063013	1
7c	ADH.PROTECCION CAJA FITRO DERECHO RACING 2013	BE951023013	1
7d	ADH.PROTECCION CAJA FITRO DERECHO XC 2013	BE951013013	1