EC 250-F 4T Racing
EC 300-F 4T Racing

DESPIECE / PART LIST

2013

GASGAS

SCHOOL OF CHAMPIONS

JUNIO/JUNE/JUIN/ GIUGNO/JUNI 2012

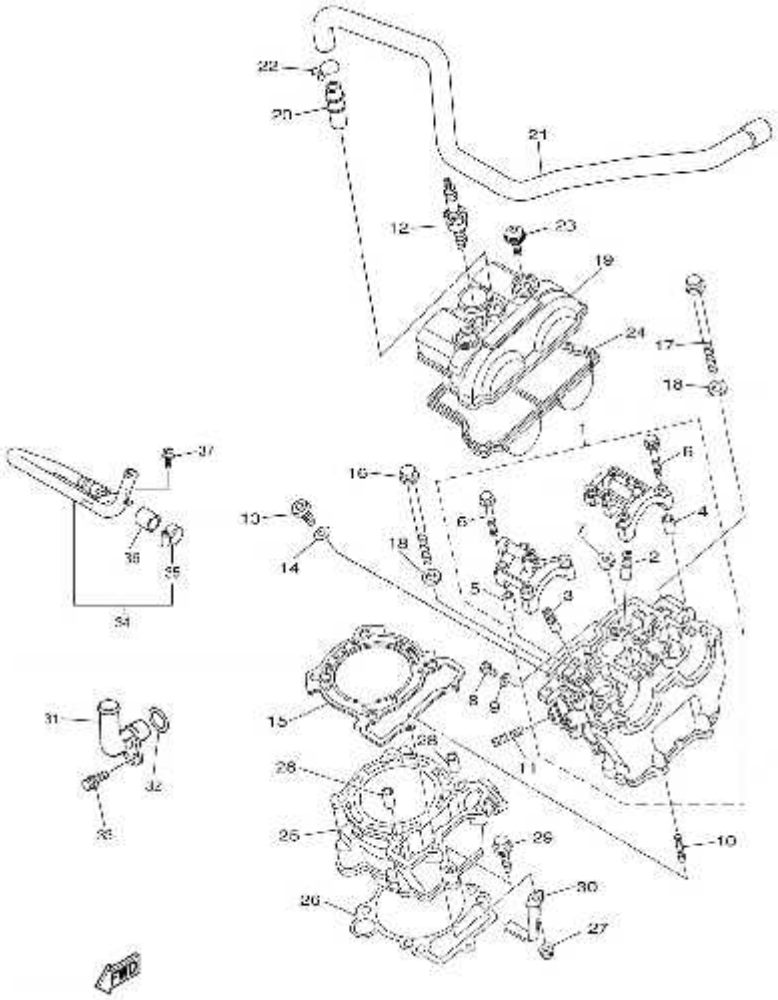
22
20
21
12
23
19
24
17
18
1
37
16
6
13
4
6
18
2
14
5
3
36
35
34
8
31
15
28
11
32
33
28
25
29
10
30
26
27

Nº	DESCRIPCION / DESCRIPTION	250	300	Cant
1	CYLINDER HEAD ASSY	5UM-11101-10		1
2	.GUIDE, VALVE 1	5NL-11133-10		3
3	.GUIDE, VALVE 2	5NL-11134-10		2
4	.PIN, DOWEL	91808-16023		2
5	.PIN, DOWEL	91808-16023		2
6	.BOLT, FLANGE	90105-06027		10
7	.PLUG, STRAIGHT SCREW	90340-12007		1
8	BOLT, FLANGE	95022-06010		1
9	GASKET	90430-06014		1
10	BOLT, STUD	90116-06038		2
11	BOLT, STUD	95612-08620		2
12	PLUG, SPARK (NGK R CR9E)	94701-00410		1
13	PLUG, STRAIGHT SCREW	90340-12007		1
14	WASHER, PLATE	90201-12790		1
15	GASKET, CYLINDER HEAD 1	5NL-11181-00		1
16	BOLT, FLANGE	90105-09004		2
17	BOLT, FLANGE	90105-09002		2
18	WASHER, PLATE	90201-096J9		4
19	COVER, CYLINDER HEAD 1	5NL-11191-40		1
20	PIPE, BREATHER 2	371-11167-01		1
21	PIPE, BREATHER 1	5UM-11166-00		1
22	CLIP	90467-140A4		1
23	BOLT, COVER HEAD	5UM-1119E-00		2
24	GASKET, HEAD COVER 1	5NL-11193-00		1
25	CYLINDER 1	5XC-11311-10		1
26	GASKET, CYLINDER	5NL-11351-00		1
27	NUT, FLANGE	95702-06500		2
28	PIN, DOWEL	93612-16254		2
29	BOLT, FLANGE	95022-06035		1
30	CLAMP, HOSE 1	5UM-11387-00		1

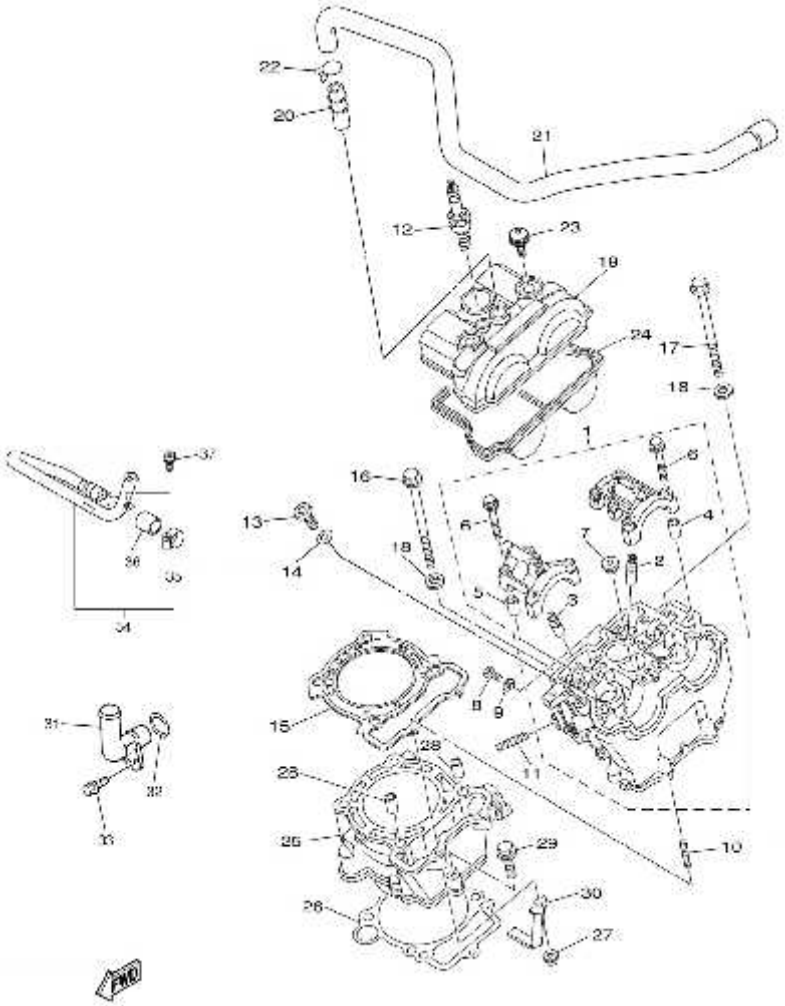
22
20
21
12
23
19
24
17
18
1
6
4
16
13
6
7
2
14
18
5
3
37
36
35
34
8
9
15
28
11
31
32
33
23
25
29
10
30
26
27

Nº	DESCRIPCION / DESCRIPTION	250	300	Cant
31	PIPE 1	5XC-12481-90		1
32	O-RING	93210-15414		1
33	BOLT	91312-06012		1
34	PIPE 1	5UM-14871-10		1
35	HOSE CLAMP ASSY	90450-20078		1
36	GASKET, MUFLER	4KM-14714-01		1
37	BOLT	90109-060E9		1
38	CYLINDER 290CC + PISTON KIT + GASKET KIT + RINGS		MF70000003012	1
39	GASKET KIT 290CC		MF90000013012	1

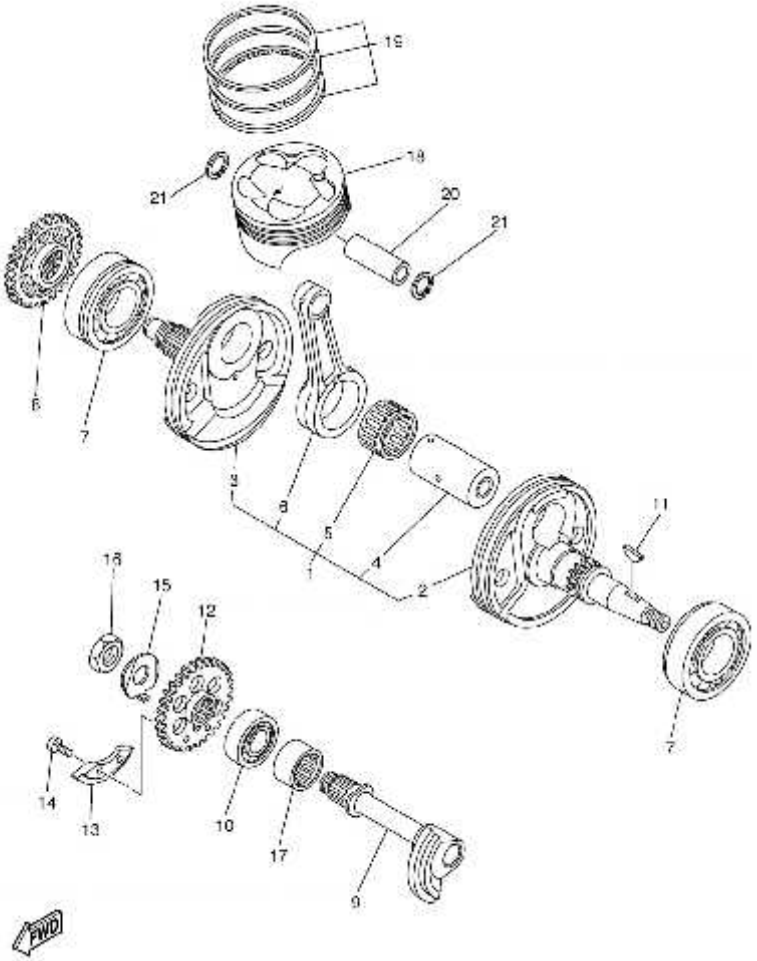
19
18
21
20
21
6
7
3
8
5
1
4
2
11
16
15
12
7
14
13
10
17
9
FWD

Nº	DESCRIPCION / DESCRIPTION	250	300	Cant
1	CRANKSHAFT ASSY	5UM-11400-31		1
2	.CRANK 1	5UM-11412-20		1
3	.CRANK 2	5UL-11422-10		1
4	.PIN, CRANK 1	5XC-11681-01		1
5	.BEARING	93310-63238		1
6	.ROD, CONNECTING	5XC-11651-00		1
7	BEARING	93306-20648		2
8	GEAR, DRIVE	5NL-11536-10		1
9	SHAFT 1	5NL-11455-00		1
10	BEARING	93306-20335		1
11	KEY, WOODRUFF	90280-03006		1
12	GEAR, BALANCE WEIGHT	5NL-11531-00		1
13	WEIGHT 1	5NL-11454-00		1
14	SCREW	90149-06084		2
15	WASHER, LOCK	90215-14204		1
16	NUT	90170-14171		1
17	BEARING	93311-32261		1
18	PISTON (STD)	5NL-11631-20		1
19	PISTON RING SET	5NL-11603-00	MF70000023012	1
20	PIN, PISTON	5NL-11633-00		1
21	CIRCLIP	93420-16086		2
22A	PISTON KIT (A) D.82,95		MF70000013012	1
22B	PISTON KIT (B) D.82,96		MF70000033012	1

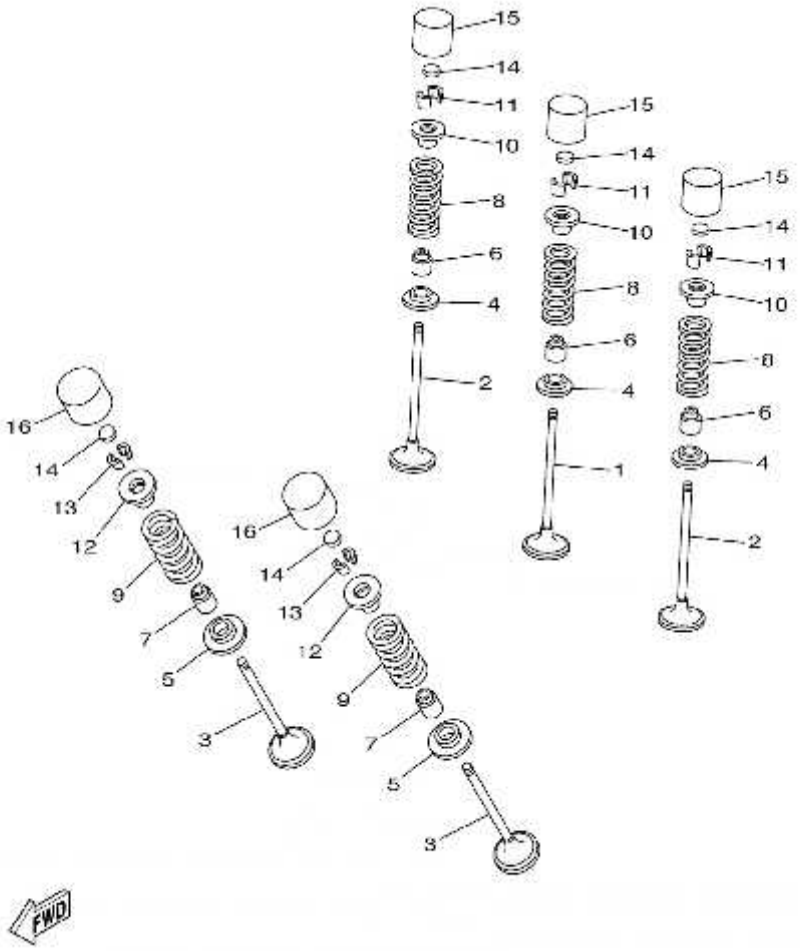
15
14
11
10
8
6
4
2
15
14
11
10
8
6
4
1
15
14
11
10
8
6
4
2
16
14
13
12
9
7
5
3
16
14
13
12
9
7
5
3
FWD

Nº	DESCRIPCION / DESCRIPTION	250		Cant
1	VALVE, INTAKE	5NL-12111-20		1
2	VALVE, INTAKE 2	5NL-12112-20		2
3	VALVE, EXHAUST	5NL-12121-10		2
4	SEAT, VALVE SPRING	5NL-12116-00		3
5	SEAT, VALVE SPRING 2	3GM-12126-00		2
6	SEAL, VALVE STEM	4TV-12119-00		3
7	SEAL, VALVE STEM	4SV-12119-00		2
8	SPRING, VALVE INNER	5UM-12113-00		3
9	SPRING, VALVE OUTER	5NL-12114-00		2
10	RETAINER, VALVE SPRING	1HX-12117-00		3
11	COTTER, VALVE	1HX-12118-00		6
12	RETAINER, VALVE SPRING	1WG-12117-00		2
13	COTTER, VALVE	1WG-12118-00		4
14	PAD, ADJUSTING 2 (1.20)	1HX-12168-00		5
	PAD, ADJUSTING 2 (1.25)	1HX-12168-20		5
	PAD, ADJUSTING 2 (1.30)	1HX-12168-40		5
	PAD, ADJUSTING 2 (1.35)	1HX-12168-60		5
	PAD, ADJUSTING 2 (1.40)	1HX-12168-80		5
	PAD, ADJUSTING 2 (1.45)	1HX-12168-A0		5
	PAD, ADJUSTING 2 (1.50)	1HX-12168-F0		5
	PAD, ADJUSTING 2 (1.55)	1HX-12168-H1		5
	PAD, ADJUSTING 2 (1.60)	1HX-12168-K1		5
	PAD, ADJUSTING 2 (1.65)	1HX-12168-M1		5
	PAD, ADJUSTING 2 (1.70)	1HX-12168-R1		5
	PAD, ADJUSTING 2 (1.75)	1HX-12168-U1		5
	PAD, ADJUSTING 2 (1.80)	1HX-12168-W1		5
	PAD, ADJUSTING 2 (1.85)	1HX-12168-Y1		5
	PAD, ADJUSTING 2 (1.90)	1HX-12169-11		5
	PAD, ADJUSTING 2 (1.95)	1HX-12169-31		5
	PAD, ADJUSTING 2 (2.00)	1HX-12169-50		5

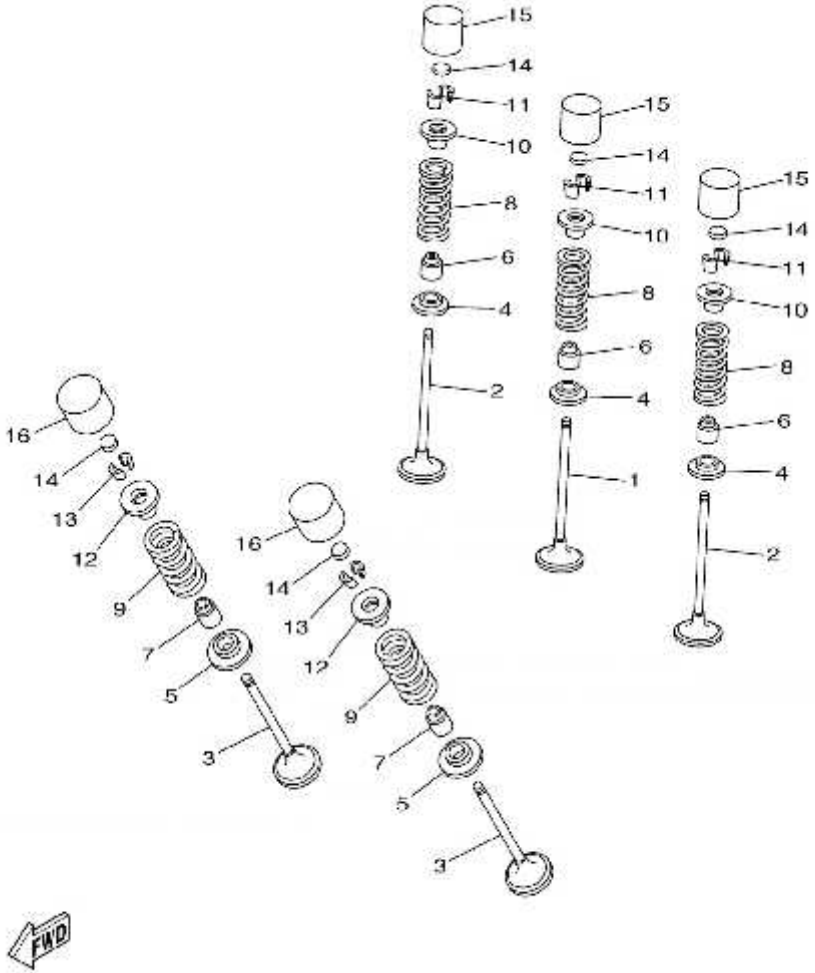
15
14
11
10
8
6
4
2
1
16
13
12
9
7
5
3
FWD

Nº	DESCRIPCION / DESCRIPTION	250		Cant
14	PAD, ADJUSTING 2 (2.05)	1HX-12169-70		5
	PAD, ADJUSTING 2 (2.10)	1HX-12169-90		5
	PAD, ADJUSTING 2 (2.15)	1HX-12169-E0		5
	PAD, ADJUSTING 2 (2.20)	1HX-12169-G0		5
	PAD, ADJUSTING 2 (2.25)	1HX-12169-J0		5
	PAD, ADJUSTING 2 (2.30)	1HX-12169-L0		5
	PAD, ADJUSTING 2 (2.35)	1HX-12169-N0		5
	PAD, ADJUSTING 2 (2.40)	1HX-12169-T0		5
15	LIFTER, VALVE	3LN-12153-10		3
16	LIFTER, VALVE	3FV-12153-10		2

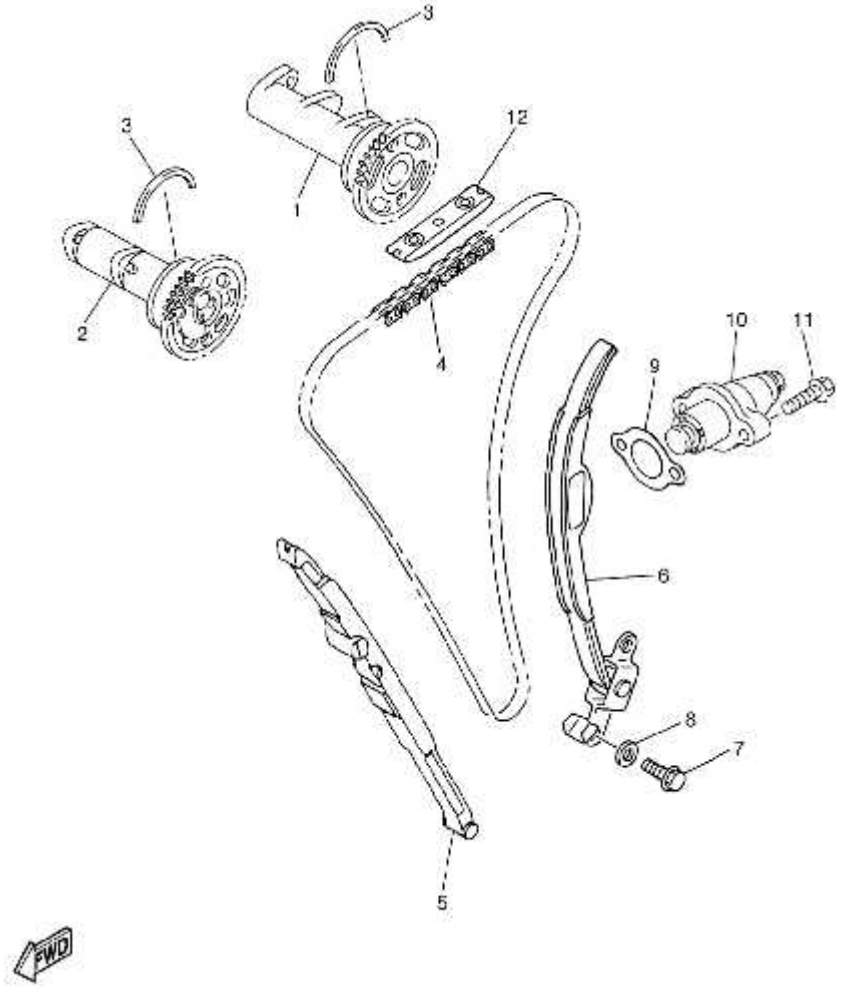
3
12
3
1
2
4
10
11
9
6
8
7
5
FWD

Nº	DESCRIPCION / DESCRIPTION	250		Cant
1	CAMSHAFT ASSY 1	5UM-12170-10		1
2	CAMSHAFT ASSY 2	5UM-12180-20		1
3	CIRCLIP	93440-41178		2
4	CHAIN	94591-53114		1
5	DAMPER, CHAIN 1	5NL-12251-10		1
6	DAMPER, CHAIN 2	5NL-12252-00		1
7	BOLT	97022-06016		2
8	WASHER, PLATE	92902-06600		2
9	GASKET, TENSIONER CASE	4FM-12213-00		1
10	TENSIONER ASSY, CAM CHAIN	5TA-12210-20		1
11	BOLT, FLANGE	95022-06025		2
12	GUIDE, STOPPER 2	5BE-12241-00		1

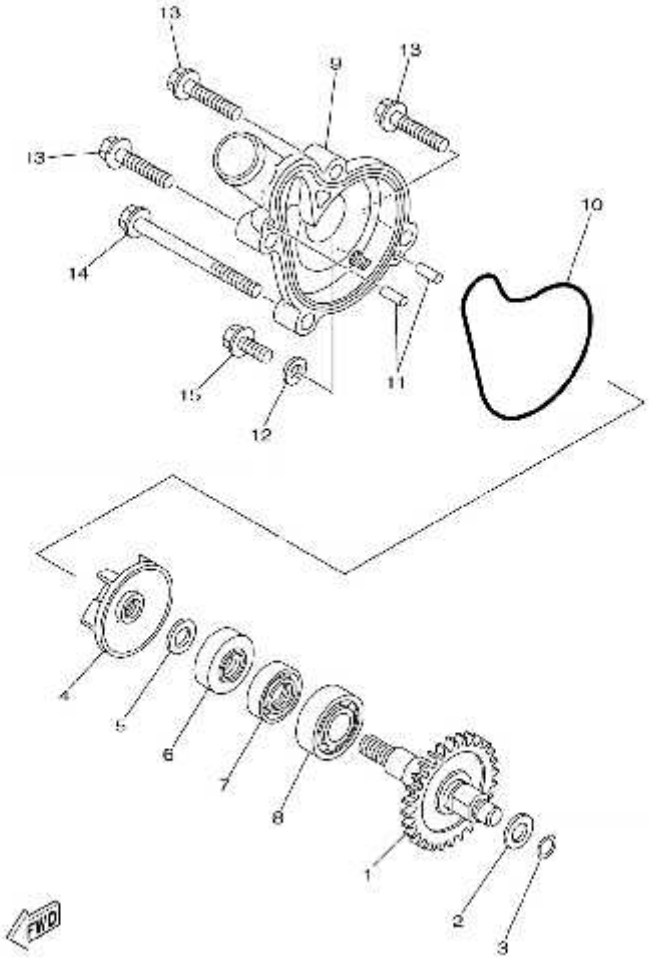
13
9
13
13
10
14
11
15
12
4
5
6
7
8
1
2
3
FWD

Nº	DESCRIPCION / DESCRIPTION	250		Cant
1	GEAR, IMPELLER SHAFT	5XC-12459-00		1
2	WASHER, PLATE	90201-08512		1
3	CIRCLIP	93440-07182		1
4	IMPELLER, WATER PUMP	5DH-12451-00		1
5	WASHER, PLATE	90201-08512		1
6	OIL SEAL	93109-11073		1
7	OIL SEAL (SD 12-22-5 HS)	93102-12106		1
8	BEARING	93306-00105		1
9	COVER, HOUSING	5NL-12422-10		1
10	O-RING	5NL-12439-00		1
11	PIN, DOWEL	93604-10011		2
12	GASKET	90430-06014		1
13	BOLT, FLANGE	95022-06025		3
14	BOLT, FLANGE	95022-06065		1
15	BOLT, FLANGE	95022-06012		1

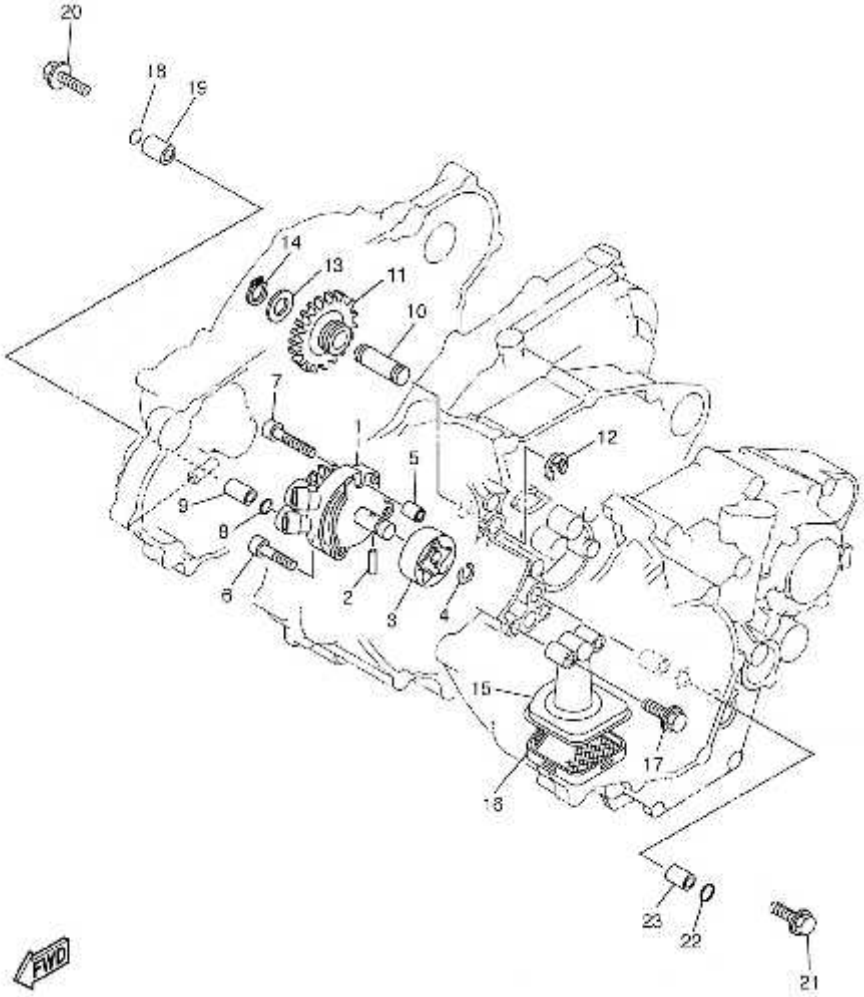
20
18
19
14
13
11
10
7
1
5
12
9
8
6
2
3
4
15
17
16
23
22
21
FWD

Nº	DESCRIPCION / DESCRIPTION	250		Cant
1	OIL PUMP ASSY	5SG-13300-01		1
2	PIN, DOWEL	93603-16219		1
3	ROTOR ASSY 2	5NL-13320-00		1
4	CIRCLIP	93440-10153		1
5	PIN, DOWEL	99530-08012		1
6	BOLT	91312-06025		2
7	BOLT	91317-06030		1
8	O-RING	93210-10197		1
9	PIN, DOWEL	99530-10114		1
10	SHAFT, IDLE GEAR	5BE-13342-00		1
11	GEAR, OIL PUMP IDLE	5NL-13341-00		1
12	CIRCLIP	99001-08600		1
13	WASHER, PLATE	90201-12166		1
14	CIRCLIP	99009-12400		1
15	HOUSING, STRAINER	5XC-13412-00		1
16	STRAINER, OIL	5NL-13411-00		1
17	BOLT, FLANGE	95022-06025		2
18	O-RING	93210-10197		1
19	PIN, DOWEL	99530-10114		1
20	BOLT, FLANGE	95022-06025		1
21	BOLT, FLANGE	95022-06025		1
22	O-RING	93210-10197		1
23	PIN, DOWEL	99530-10114		1

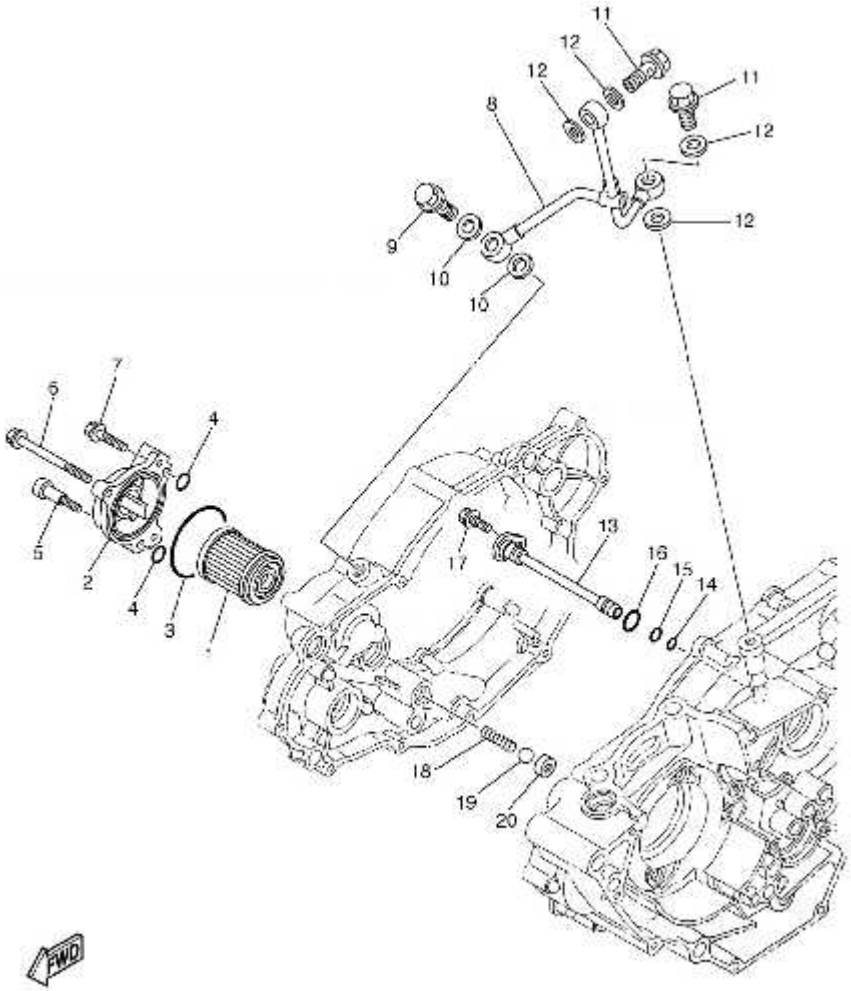
11
12
12
11
8
12
9
12
10
10
7
6
4
5
2
4
3
1
13
17
16
15
14
18
19
20
FWD

Nº	DESCRIPCION / DESCRIPTION	250		Cant
1	ELEMENT ASSY, OIL CLEANER	5D3-13440-00		1
2	COVER, OIL ELEMENT	5BE-13447-20		1
3	O-RING	93210-47675		1
4	O-RING	93210-07135		3
5	BOLT, HEXAGON SOCKET HEAD	90110-06228		1
6	BOLT	91312-06065		1
7	BOLT	91312-06025		1
8	PIPE, DELIVERY 1	5NL-13161-20		1
9	BOLT, UNION	90401-10015		1
10	GASKET	90430-10188		2
11	BOLT, UNION	90401-08006		2
12	GASKET	90430-08119		4
13	PIPE, DELIVERY 2	5NL-13171-10		1
14	O-RING	93210-07003		1
15	O-RING	93210-09525		1
16	O-RING	93210-12010		1
17	BOLT, FLANGE	95022-06012		1
18	SPRING, COMPRESSION	90501-043E0		1
19	BALL	93503-08007		1
20	SEAT, CHECK BALL	583-13113-00		1

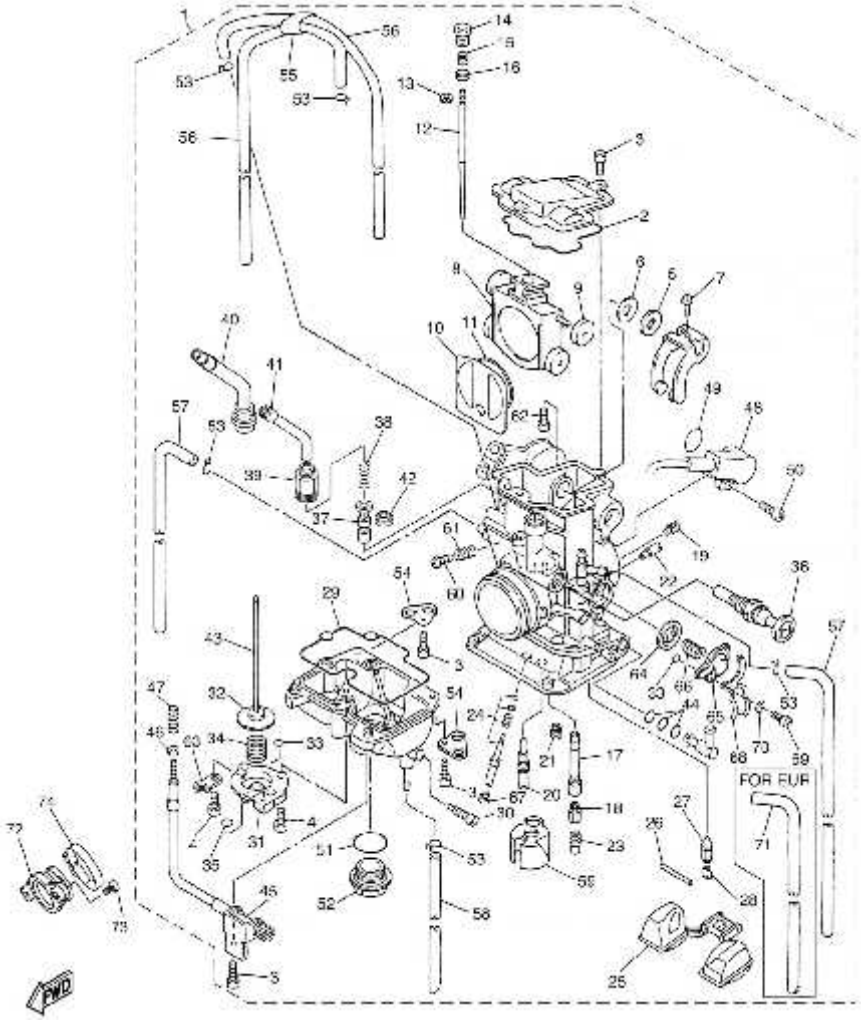
FOR EUR

Nº	DESCRIPCION / DESCRIPTION	250		Cant
1	CARBURETOR ASSY 1	5UM-14101-L0		1
2	.GASKET	5JG-14959-00		1
3	.BOLT	91316-04012		6
4	.SCREW	688-14592-00		3
5	.WASHER, PLATE	90202-08045		1
6	.WASHER	5JG-14951-00		1
7	.SCREW, ADJUST	5JG-14522-00		1
8	.VALVE, VACUUM CONTROL	2S2-14388-00		1
9	.ROLLER	3TJ-14267-40		1
10	.VALVE, NEEDLE	5JG-14546-01		1
11	.SEAL	4FN-14997-00		1
12	.NEEDLE (NNGU)	5UM-14916-LU		1
	.NEEDLE (GDEMP)	5UM-14916-VP		1
	.NEEDLE (GDEMQ)	5UM-14916-V1		1
	.NEEDLE (GDEMR)	5UM-14916-VR		1
	.NEEDLE (GDEMS)	5UM-14916-VS		1
	.NEEDLE (GDEMT)	5UM-14916-VT		1
	.NEEDLE (GDEMU)	5UM-14916-VU		1
	.NEEDLE (GDEMV)	5UM-14916-VV		1
13	.CLIP	3TJ-14159-40		1
14	.SCREW, ADJUST	5JG-14521-00		1
15	.SPRING	5JG-14275-00		1
16	.COLLAR	5JG-14264-00		1
17	.JET, NEEDLE	5TJ-14947-00		1
18	.JET, MAIN (#160)	4MX-14943-39		1
	.JET, MAIN (#182)	4MX-14943-94		1
	.JET, MAIN (#180)	4MX-14943-43		1
	.JET, MAIN (#162)	4MX-14943-90		1
	.JET, MAIN (#165)	4MX-14943-40		1
	.JET, MAIN (#168)	4MX-14943-91		1
	.JET, MAIN (#170)	4MX-14943-41		1
	.JET, MAIN (#172)	4MX-14943-92		1
	.JET, MAIN (#175)	4MX-14943-42		1
	.JET, MAIN (#178)	4MX-14943-93		1

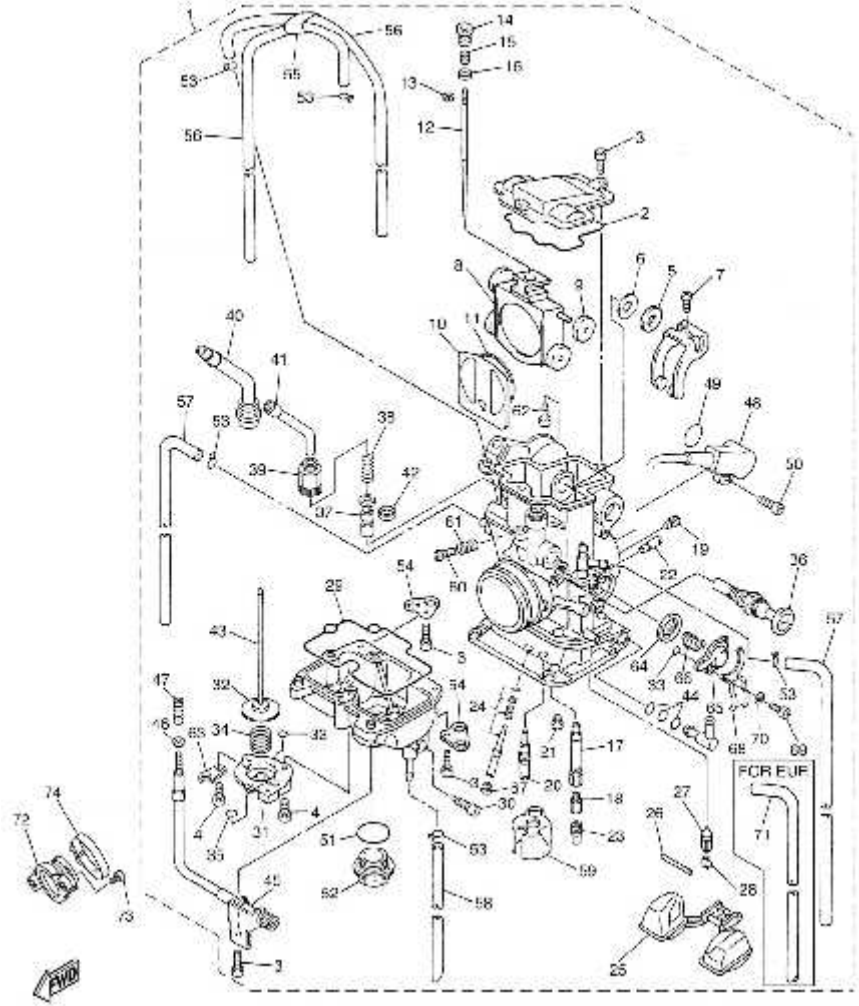
FCR EUR
FWD

Nº	DESCRIPCION / DESCRIPTION	250		Cant
19	.JET (#115)	5UM-1494F-30		1
20	.JET, SLOW (#45)	4MX-14948-05		1
	.JET, SLOW (#50)	4MX-14948-07		1
	.JET, SLOW (#40)	4MX-14948-03		1
	.JET, SLOW (#42)	4MX-14948-04		1
	.JET, SLOW (#48)	4MX-14948-06		1
21	.JET (#68)	3TJ-1494F-14		1
	.JET (#62)	3TJ-1494F-12		1
	.JET (#65)	3TJ-1494F-13		1
	.JET (#70)	3TJ-1494F-15		1
	.JET (#72)	3TJ-1494F-16		1
22	.JET, MAIN (#70)	5TA-14943-15		1
23	.JET (#70)	4JT-1494F-15		1
	.JET (#60)	4JT-1494F-11		1
	.JET (#80)	4JT-1494F-19		1
	.JET (#90)	4JT-1494F-23		1
	.JET(#100)	4JT-1494F-27		1
	.JET(#110)	4JT-1494F-29		1
	.JET(#120)	4JT-1494F-31		1
24	.PILOT SCREW SET	5NL-14105-00		1
25	.FLOAT	4SR-14985-00		1
26	.PIN, FLOAT ARM	676-14548-00		1
27	.VALVE, NEEDLE	4MX-14392-00		1
28	.CLIP	633-14159-00		1
29	.GASKET, FLOAT CHAMBER	5JG-14984-00		1
30	.PLUG, DRAIN	3TJ-14191-40		1
31	.COVER 1	3TJ-14293-40		1
32	.DIAPHRAGM, ACC PUMP (DPH#30)	5JG-14940-76		1
	.DIAPHRAGM, ACC PUMP (DPH#45)	5JG-14940-16		1
	.DIAPHRAGM, ACC PUMP (DPH#35)	5JG-14940-17		1
	.DIAPHRAGM, ACC PUMP (DPH#25)	5JG-14940-18		1
33	.GASKET	3TJ-14536-40		2
34	.SPRING, DIAPHRAGM	3TJ-14933-40		1

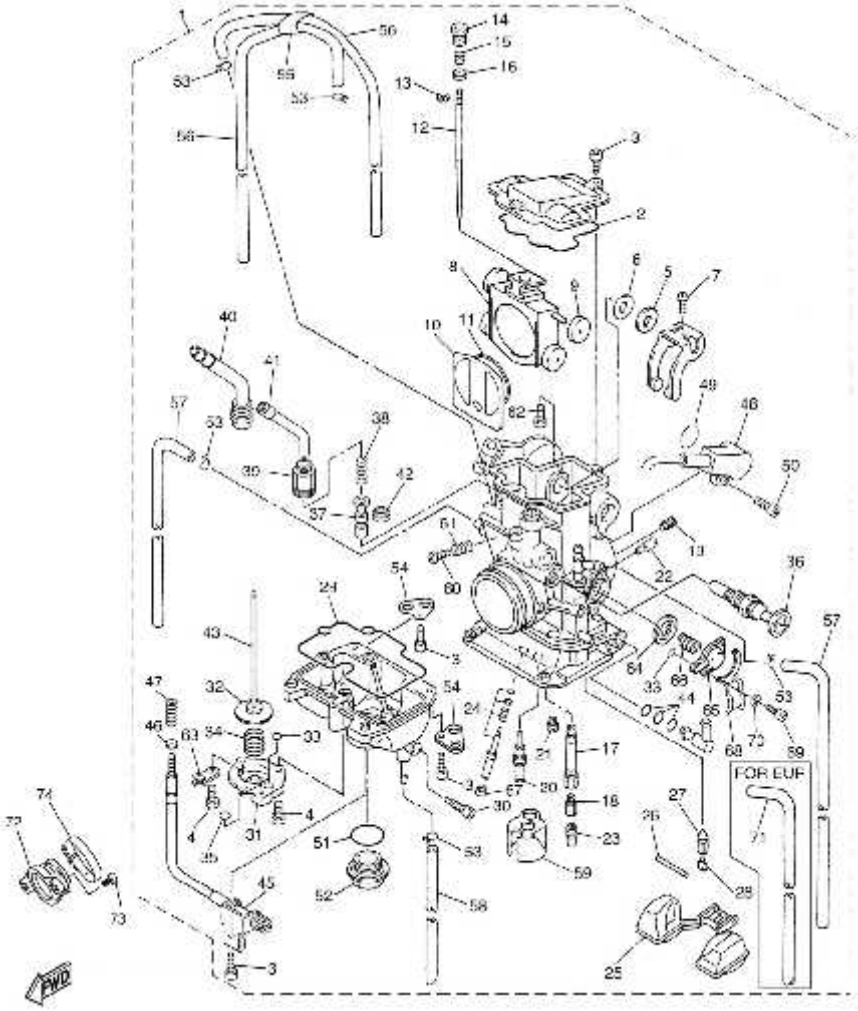
FOR EUR
FWD

Nº	DESCRIPCION / DESCRIPTION	250		Cant
35	.O-RING	6H4-14561-00		1
36	.PLUNGER, STARTER	5XC-14171-00		1
37	.PLUNGER, STARTER	5TA-14371-00		1
38	.SPRING, PLUNGER	5TA-14335-00		1
39	.SCREW	5TA-14991-00		1
40	.CAP, PLUNGER	2S2-14374-00		1
41	.GUIDE, CABLE	5TA-14155-00		1
42	.SEAL	5TA-14997-00		1
43	.ROD, STARTER	5JG-14379-00		1
44	.O-RING	3TJ-14564-40		3
45	.SCREW, THROTTLE	5XC-14922-00		1
46	.WASHER, PLATE	90201-08410		1
47	.SPRING, THROTTLE STOP	5TA-14934-00		1
48	.THROTTLE SENSOR ASSY	5XC-85885-00		1
49	.O-RING	5NX-14562-00		1
50	.SCREW	5NX-14216-00		1
51	.O-RING	4MX-14561-00		1
52	.PLUG, SCREW	4MX-14115-00		1
53	.CLIP	3TJ-14137-40		5
54	.PLATE	5BE-14146-00		2
55	.HOLDER	5TA-14261-00		1
56	.PIPE, OVER FLOW 1	5UL-14196-00		2
57	.PIPE	5TA-14197-00		1
58	.HOSE	5TJ-14987-00		1
59	.PLATE	5JG-14346-00		1
60	.SCREW	5JG-14565-00		1
61	.SPRING, ADJUST SCREW	5JG-14531-00		1
62	.SCREW	5UM-14591-00		1

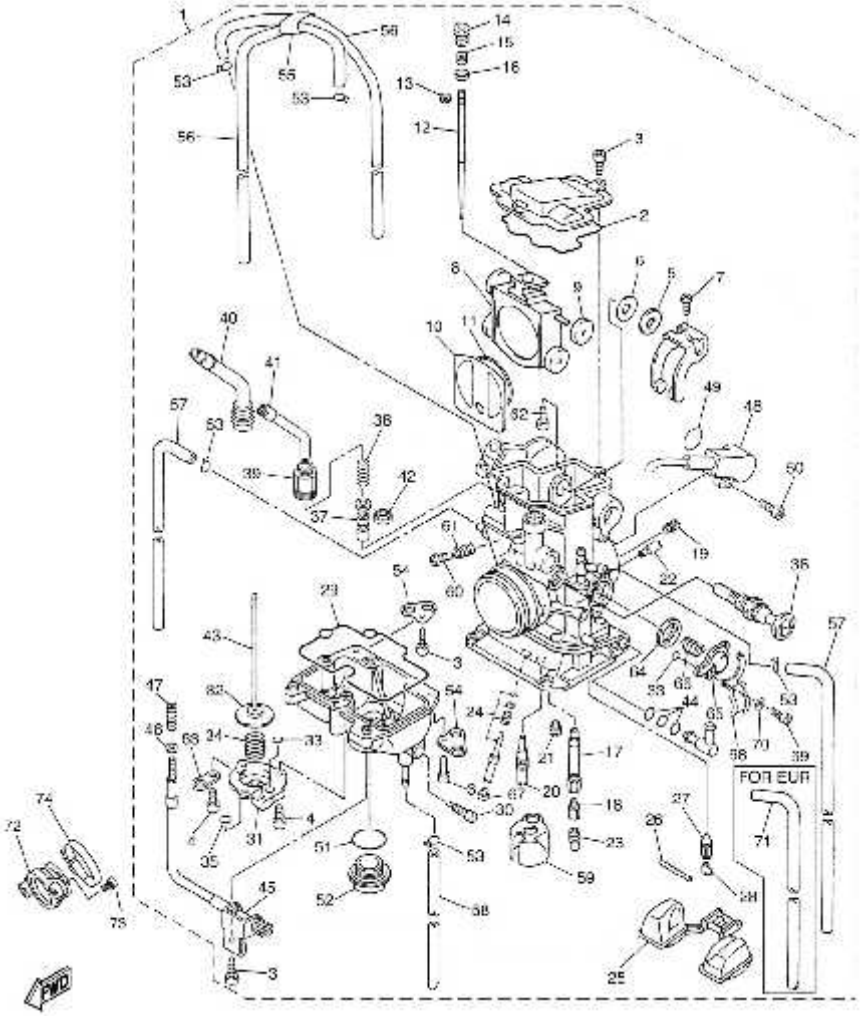
FOR EUR

Nº	DESCRIPCION / DESCRIPTION	250		Cant
63	.PLATE	5PA-14146-00		1
64	.DIAPHRAGM ASSY	5GS-14940-00		1
65	.COVER, DIAPHRAGM	5GS-14958-00		1
66	.SPRING, DIAPHRAGM	5GS-14933-00		1
68	.PLATE	5TJ-14243-00		1
69	.SCREW, PAN HEAD	98502-04010		2
70	.WASHER, SPRING	92902-04100		2
71	.PIPE	5UM-14197-00		1
72	JOINT, CARBURATOR 3	5XC-13597-30		1
73	BOLT	91312-06025		2
74	HOSE CLAMP ASSY	90450-57010		1

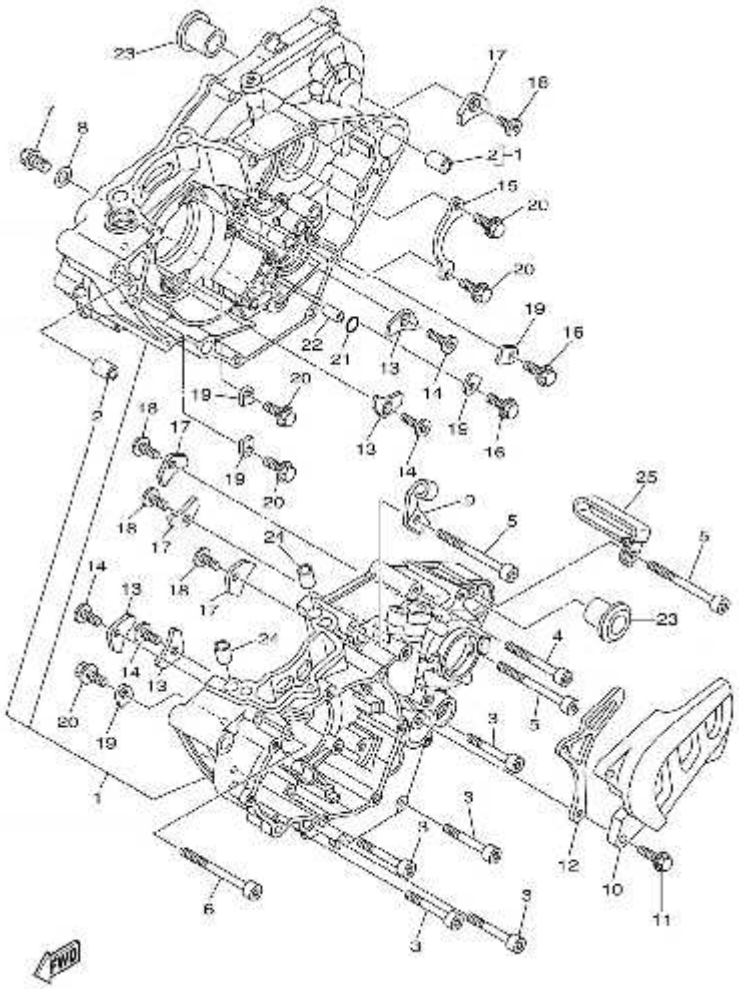
23
17
16
8
2
1
15
20
20
19
16
22
21
13
14
19
20
2
18
17
13
15
16
19
20
14
25
18
17
5
21
5
14
13
18
17
23
4
14
13
20
19
3
5
1
3
3
12
10
6
3
11
3
FWD

Nº	DESCRIPCION / DESCRIPTION	250		Cant
1	CRANKCASE ASSY	5UM-15100-21-YX		1
2	.PIN, DOWEL	93612-16254		2
3	BOLT	91312-06045		5
4	BOLT	91312-06055		1
5	BOLT	91312-06070		3
6	BOLT	91312-06100		1
7	BOLT, FLANGE	95022-10016		1
8	GASKET	90430-10188		1
9	HOLDER, CLUTCH CABLE	5NL-15441-01		1
10	COVER, CRANKCASE 2	BFS486002510		1
11	BOLT, FLANGE	T0206025		2
12	GUIDE, CHAIN	5UM-17466-00		1
13	PLATE, BEARING COVER	5BE-15383-01		4
14	SCREW, COUNTERSUNK	90151-06044		4
15	PLATE, BEARING COVER	5NL-15388-00		1
16	BOLT, FLANGE	90105-06081		2
17	PLATE, BEARING COVER	4JT-15381-01		4
18	SCREW	90149-06074		4
19	PLATE, STOPPER 2	5DH-18562-00		5
20	BOLT, FLANGE	90105-06081		5
21	O-RING	93210-10197		1
22	PIN, DOWEL	99530-10114		1
23	COLLAR	90387-18007		2
24	PIN, DOWEL	99530-10116		2
25	CLAMP	90465-10013		1

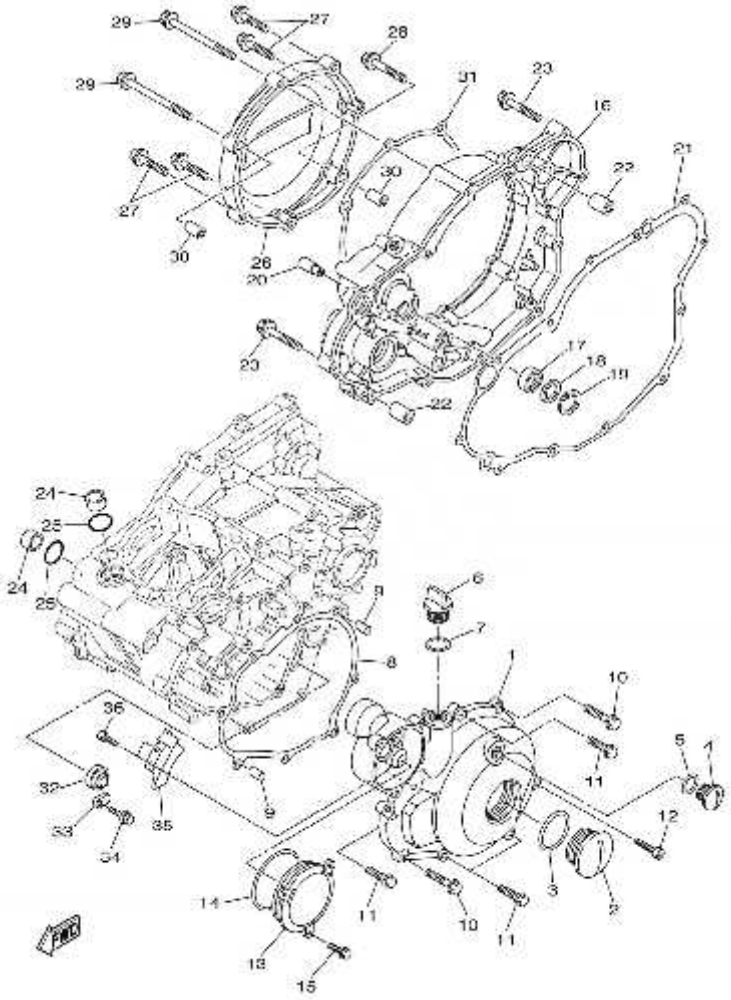
29
27
28
29
31
23
16
21
22
30
27
30
26
20
23
17
18
19
22
24
25
24
25
6
7
8
1
10
36
5
4
32
11
33
35
12
34
3
2
14
11
10
11
13
15

Nº	DESCRIPCION / DESCRIPTION	250		Cant
1	COVER, CRANKCASE 1	5UM-15411-20		1
2	PLUG, STRAIGHT SCREW	90340-27004		1
3	O-RING	93210-27370		1
4	PLUG, STRAIGHT SCREW	90340-14015		1
5	O-RING	93210-14369		1
6	PLUG, OIL	3Y1-15363-10		1
7	O-RING	93210-19123		1
8	GASKET, CRANKCASE COVER 1	5UM-15451-00		1
9	PIN, DOWEL	99530-08016		2
10	BOLT, FLANGE	95022-06040		2
11	BOLT, FLANGE	95022-06030		4
12	BOLT	91312-06110		1
13	COVER ASSY 2	5UM-1549B-20		1
14	O-RING	93210-60426		1
15	BOLT, FLANGE	95022-06016		3
16	COVER, CRANKCASE 3	5XC-15431-01		1
17	OIL SEAL	93101-14164		1
18	WASHER, PLATE (T=1.0)	90201-15701		1
19	CIRCLIP	99009-22500		1
20	CAP	MF15-00001-2512		1
21	GASKET, CRANKCASE COVER 3	5NL-15462-00		1
22	PIN, DOWEL	91812-16001		2
23	BOLT, FLANGE	95022-06035		8
24	PIPE, WATER	5NL-12564-00		2
25	O-RING	93210-16716		2
26	COVER, GENERATOR	5NL-15415-30		1
27	BOLT, FLANGE	95022-06025		4
28	BOLT, FLANGE	95022-06035		1
29	BOLT, FLANGE	90105-06098		2
30	PIN, DOWEL	99530-08016		2

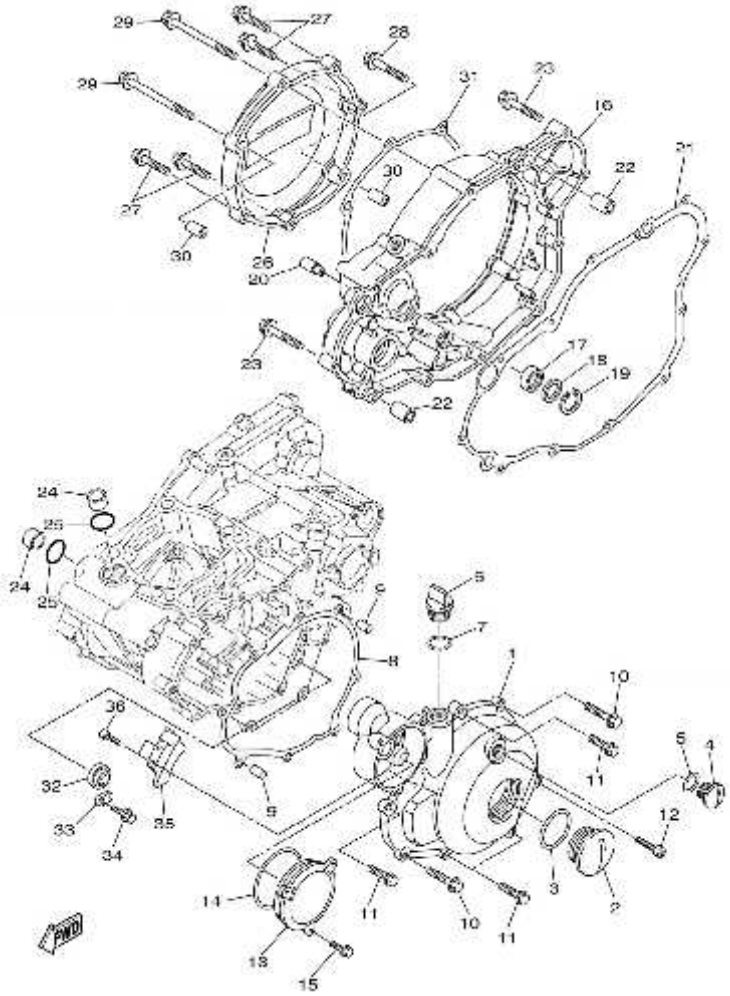
29
27
28
29
31
23
16
30
22
21
27
30
26
20
23
17
18
19
22
24
25
24
25
6
5
7
8
1
10
36
5
4
32
11
9
12
33
35
34
3
2
14
11
10
11
13
15
FWD

Nº	DESCRIPCION / DESCRIPTION	250		Cant
31	GASKET	5NL-15453-10		1
32	GAUGE, LEVEL	3Y1-15361-00		1
33	HOLDER	5XC-15118-00		1
34	BOLT, FLANGE	90105-06094		1
35	CLAMP 1	5UM-81528-00		1
36	BOLT	91312-05012		2

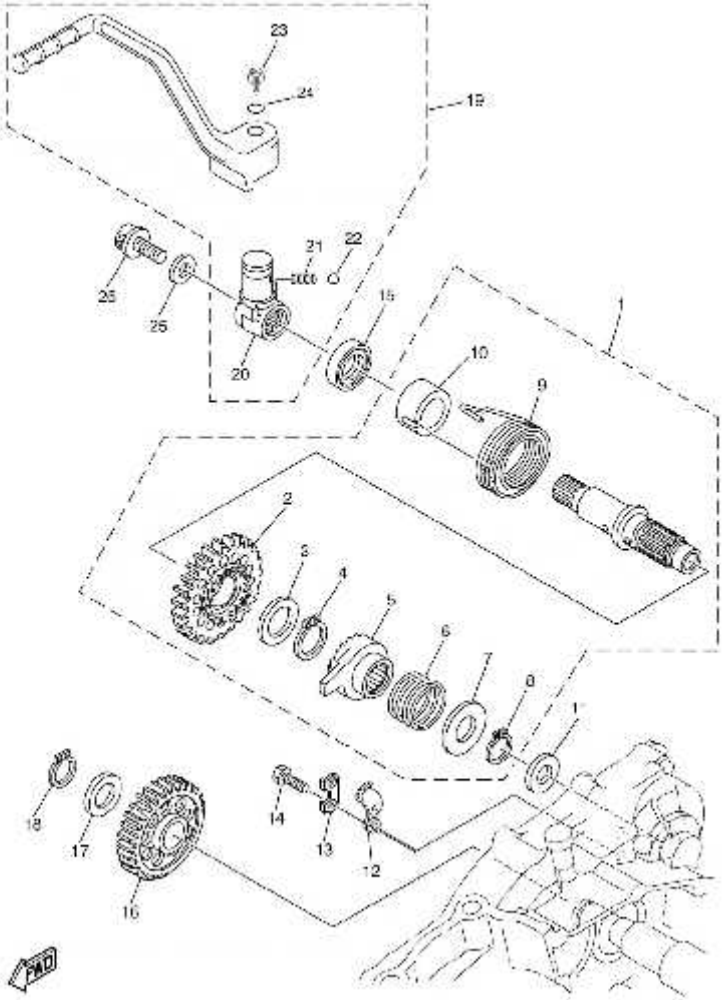
23
24
19
21
22
26
25
15
20
10
9
1
2
3
4
5
6
7
8
18
17
16
14
13
12
FWD

Nº	DESCRIPCION / DESCRIPTION	250	300	Cant
1	KICK SHAFT ASSY	5NL-15601-20	5NL-15601-20	1
2	.GEAR, KICK	5NL-15641-20	5NL-15641-20	1
3	.WASHER, PLATE (T=0.5)	90201-20685	90201-20685	1
4	.CIRCLIP	93410-20038	93410-20038	1
5	.WHEEL, RATCHET	2S2-15671-00	2S2-15671-00	1
6	.SPRING, COMPRESSION	90501-160A2	90501-160A2	1
7	.WASHER, PLATE	90201-167P7	90201-167P7	1
8	.CIRCLIP	99009-16400	99009-16400	1
9	.SPRING, TORSION	90508-30743	90508-30743	1
10	.GUIDE, SPRING	5NL-15664-00	5NL-15664-00	1
11	WASHER, PLATE	90201-162H4	90201-162H4	1
12	STOPPER	5SG-15668-00	5SG-15668-00	1
13	WASHER, LOCK	214-15686-00	214-15686-00	1
14	BOLT	90101-06044	90101-06044	2
15	OIL SEAL	93102-18278	93102-18278	1
16	GEAR, KICK IDLE	5NL-15651-00	5NL-15651-00	1
17	WASHER, PLATE	90201-177G4	90201-177G4	1
18	CIRCLIP	99009-17400	99009-17400	1
19	KICK CRANK ASSY	MFS890002510	MFS890002510	1
20	.BOSS, KICK CRANK	ME250036061	ME250036061	1
21	.SPRING, COMPRESSION	ME250036066	ME250036066	1
22	.BALL	ME250036062	ME250036062	1
23	.SCREW	T0508020	T0508020	1
24	.O-RING	ME250036063	ME250036063	1
25	WASHER, PLATE	T4006020	T4006020	1
26	BOLT, HEXAGON SOCKET HEAD	T0316012	T0316012	1

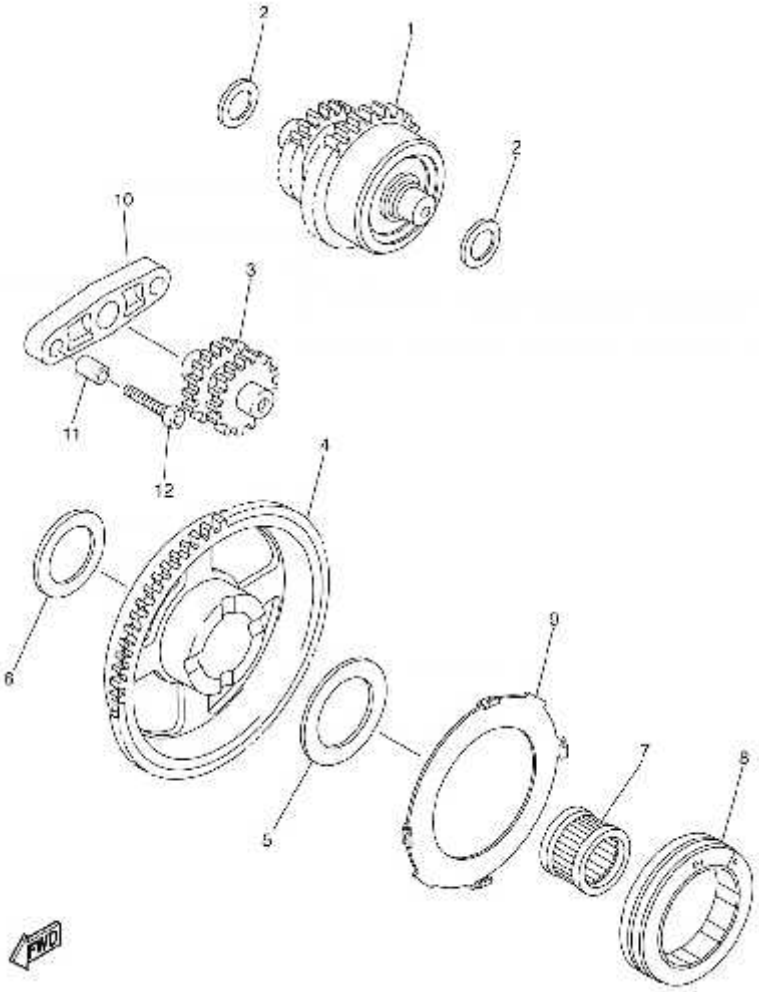
2
1
2
10
3
11
12
4
6
9
5
7
8
FWD

Nº	DESCRIPCION / DESCRIPTION	250		Cant
1	DAMPER ASSY	5UM-15560-10		1
2	WASHER, PLATE	90201-104R2		2
3	GEAR, IDLER 2	5UM-15517-00		1
4	GEAR 3	5UM-15515-20		1
5	WASHER, PLATE (T=1.0)	90201-20021		1
6	WASHER, PLATE	90201-203L1		1
7	BEARING	93310-42057		1
8	STARTER CLUTCH ASSY	5UM-15570-00		1
9	PLATE, STARTER CLUTCH ASSY	5VY-15586-00		1
10	PLATE, IDLE GEAR	5UM-15532-00		1
11	PIN, DOWEL	99530-08012		2
12	BOLT	91312-06025		2

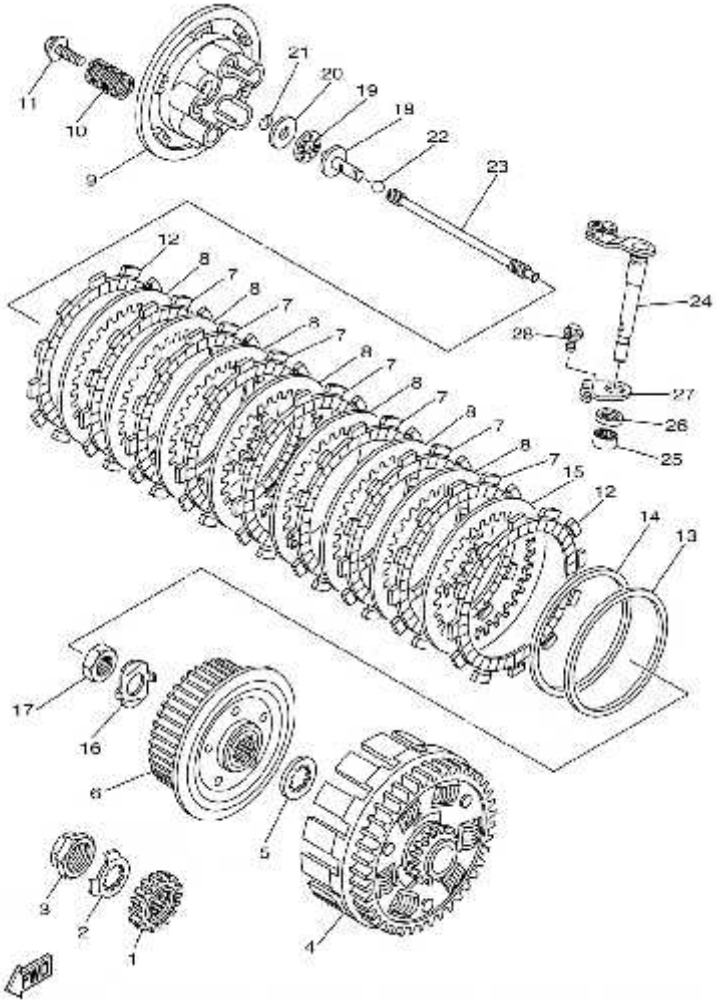
11
10
9
21
20
19
19
22
23
12
8
7
8
7
8
7
8
7
8
7
8
7
8
7
15
12
14
13
24
28
27
26
25
17
16
6
5
3
2
1
4

Nº	DESCRIPCION / DESCRIPTION	250		Cant
1	GEAR, PRIMARY DRIVE	5NL-16111-01		1
2	WASHER, LOCK	90215-20003		1
3	NUT	90179-18001		1
4	PRIMARY DRIVEN GEAR COMP.	5XC-16150-00		1
5	PLATE, THRUST 1	5NL-16154-00		1
6	BOSS, CLUTCH	5NL-16371-01		1
7	PLATE, FRICTION	5DH-16321-00		7
8	PLATE, CLUTCH 2	5NL-16325-00		7
9	PLATE, PRESSURE 1	5HD-16351-00		1
10	SPRING, COMPRESSION	90501-220A0		5
11	SCREW, WITH WASHER	90159-06092		5
12	PLATE, FRICTION	3XJ-16321-00		2
13	PLATE, SEAT	5NL-16384-00		1
14	SPRING.,CUSHION	5NL-16383-10		1
15	PLATE, CLUTCH 2	5NL-16325-10		1
16	WASHER, LOCK	90215-16289		1
17	NUT	90170-16326		1
18	ROD, PUSH 1	5XC-16356-00		1
19	BEARING	93340-21008		1
20	WASHER, PLATE	90201-080H1		1
21	CIRCLIP	93440-07182		1
22	BALL	93511-32027		1
23	ROD, PUSH 2	5NL-16357-10		1
24	PUSH LEVER COMP.	5XC-16381-10		1
25	BEARING	93317-11287		1
26	OIL SEAL	93102-12224		1
27	PLATE, SEAT	4JT-16384-00		1
28	BOLT, FLANGE	95022-06010		1

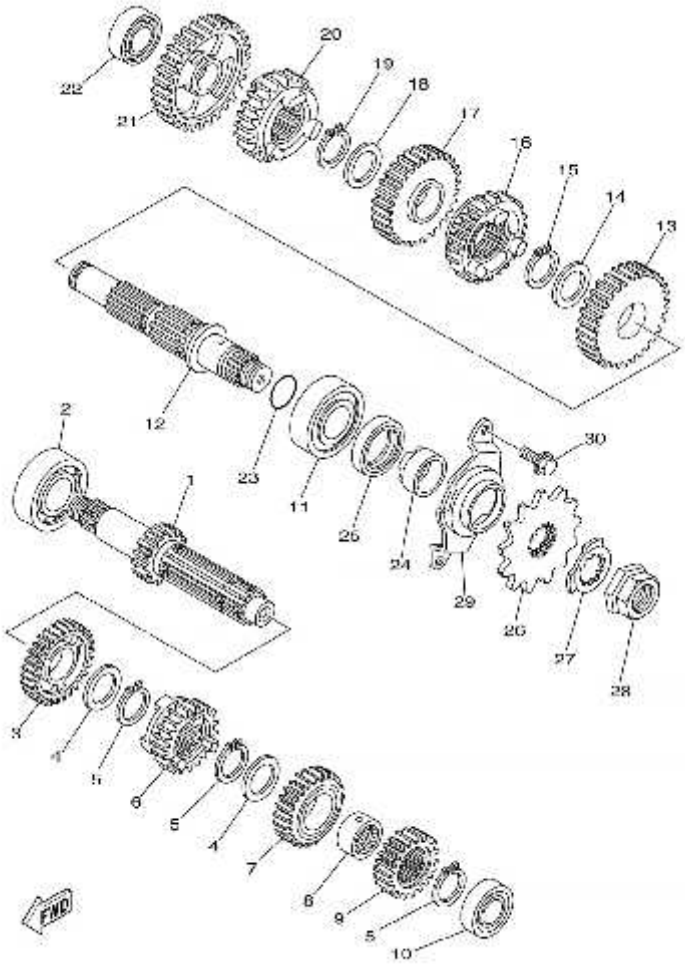
22
21
20
19
18
17
16
15
14
13
12
2
1
23
11
25
24
29
26
27
28
30
3
4
5
6
5
4
7
8
9
5
10
FWD

Nº	DESCRIPCION / DESCRIPTION	250		Cant
1	AXLE, MAIN (13T)	5UM-17411-00		1
2	BEARING	93306-20447		1
3	GEAR,5TH PINION (19T)	5UM-17151-00		1
4	WASHER	90209-20008		2
5	CIRCLIP	93410-22039		3
6	GEAR,3RD PINION (17T)	5UM-17131-00		1
7	GEAR, 4TH PINION (21T)	5UM-17141-00		1
8	COLLAR	90387-20006		1
9	GEAR, 2ND PINION (16T)	5NL-17121-00		1
10	BEARING	93306-00320		1
11	BEARING	93306-27208		1
12	DRIVE AXLE ASSY	5NL-17402-01		1
13	GEAR, 2ND WHEEL (28T)	5NL-17221-00		1
14	WASHER	90209-23012		1
15	CIRCLIP	93410-26067		1
16	GEAR, 4TH WHEEL (23T)	5UM-17241-00		1
17	GEAR,3RD WHEEL (23T)	5UM-17231-00		1
18	WASHER	90209-20008		1
19	CIRCLIP	93410-22039		1
20	GEAR,5TH WHEEL (17T)	5UM-17251-00		1
21	GEAR,1ST WHEEL (31T)	5PH-17211-00		1
22	BEARING	93306-00317		1
23	O-RING	93210-196A4		1
24	COLLAR	90387-22001		1
25	OIL SEAL	93102-28010		1
26	SPROCKET, DRIVE (13T)	9383B-13218		1
	SPROCKET, DRIVE (14T)	9383B-14222		1
27	WASHER, LOCK	90215-20003		1
28	NUT	90179-18001		1
29	PLATE, COVER	5NL-17471-10		1
30	BOLT, FLANGE	90105-06081		2

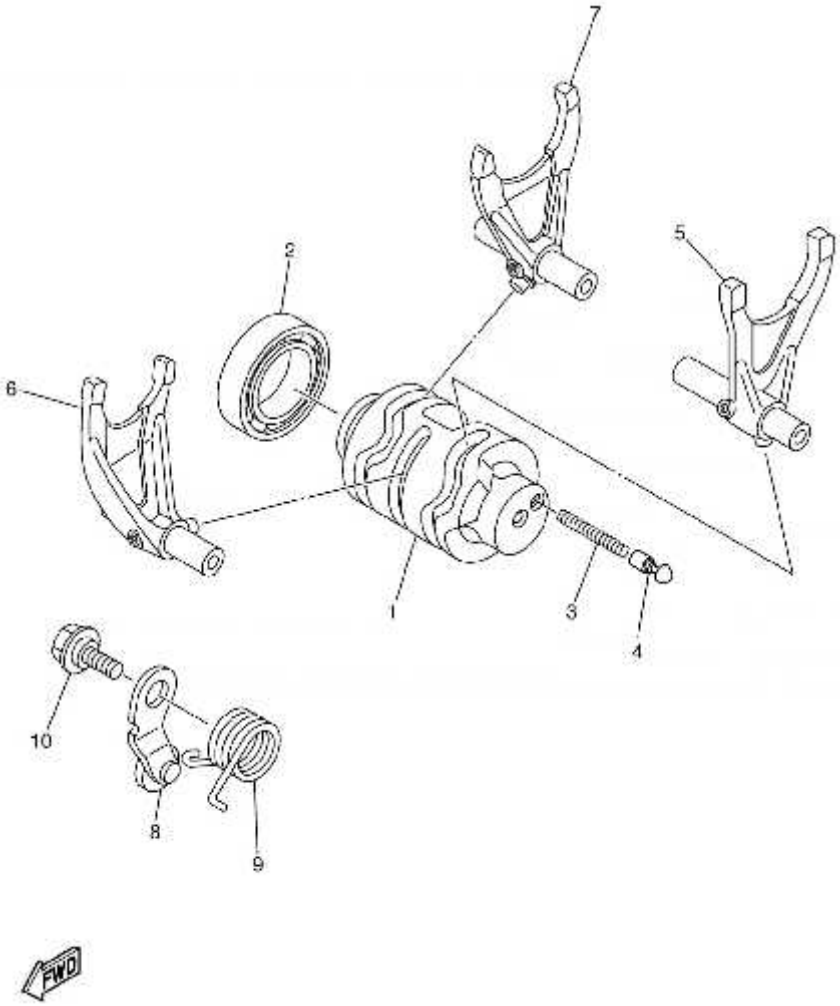
7
2
5
6
1
3
4
10
8
9
FWD

Nº	DESCRIPCION / DESCRIPTION	250		Cant
1	CAM, SHIFT	5NL-18541-00		1
2	BEARING	93306-90509		1
3	SPRING, COMPRESSION	90501-06022		1
4	POINT, NEUTRAL	4UN-18542-00		1
5	FORK, SHIFT 1	5NL-18501-00		1
6	FORK, SHIFT 2	5NL-18502-00		1
7	FORK, SHIFT 3	5NL-18503-00		1
8	STOPPER LEVER ASSY	3XK-18140-00		1
9	SPRING, TORSION	90508-26561		1
10	BOLT	90109-06193		1

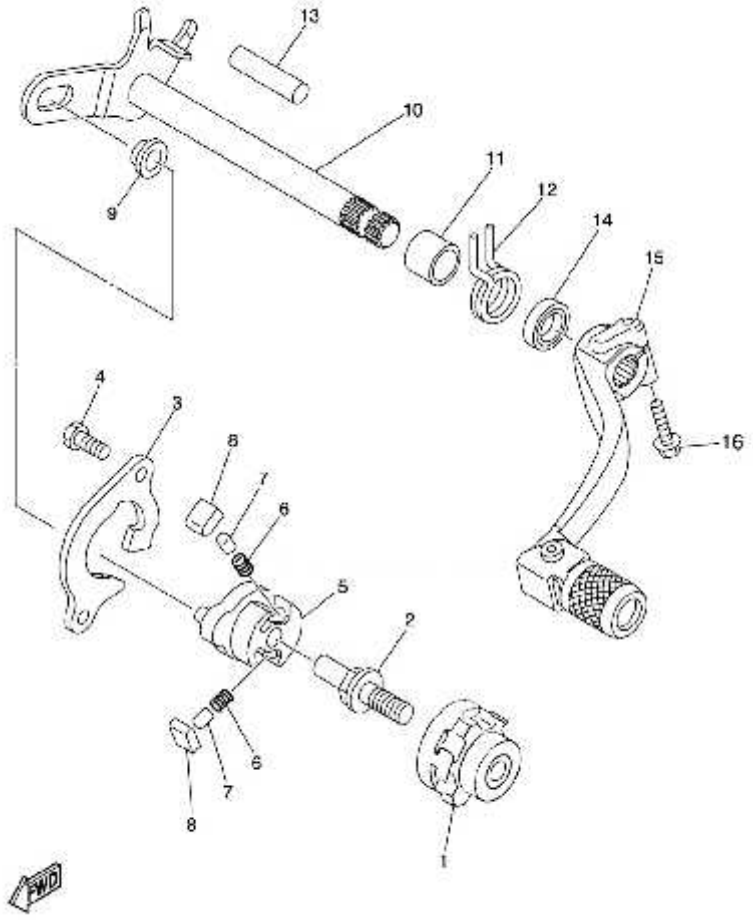
13
10
11
12
14
15
9
4
3
16
8
7
6
5
2
6
7
8
1
FWD

Nº	DESCRIPCION / DESCRIPTION	250		Cant
1	SEGMENT	2S2-18185-00		1
2	PIN, SHIFT	3XJ-18173-10		1
3	GUIDE, SHIFT	5BE-18172-00		1
4	BOLT	90101-06041		2
5	LEVER, SHIFT 2	5LP-18122-01		1
6	SPRING, COMPRESSION	90501-052G5		2
7	PIN, PAWL	3XJ-18184-00		2
8	PAWL, SHIFTER	3XJ-18182-00		2
9	ROLLER, SHIFT LEVER	3XJ-18178-00		1
10	SHIFT SHAFT ASSY	5UL-18101-10		1
11	COLLAR	90387-124F4		1
12	SPRING, TORSION	90508-291A8		1
13	PIN, DOWEL	93608-33002		1
14	OIL SEAL	93102-12224		1
15	SHIFT PEDAL ASSY	5XC-18110-00		1
16	BOLT, FLANGE	T0206020		1

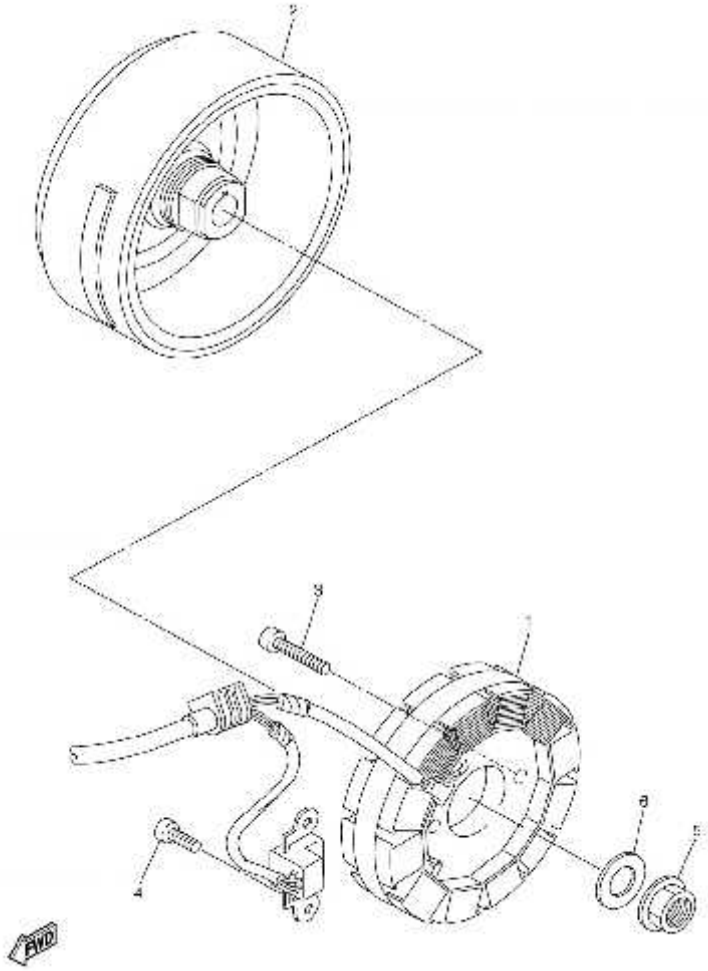
2
3
1
4
8
5
FWD

Nº	DESCRIPCION / DESCRIPTION	250		Cant
1	STATOR ASSY	5UM-81410-31		1
2	ROTOR ASSY	5UM-81450-00		1
3	BOLT	91312-05020		2
4	BOLT	91312-06014		2
5	NUT	90179-12657		1
6	WASHER, PLATE	90201-12020		1

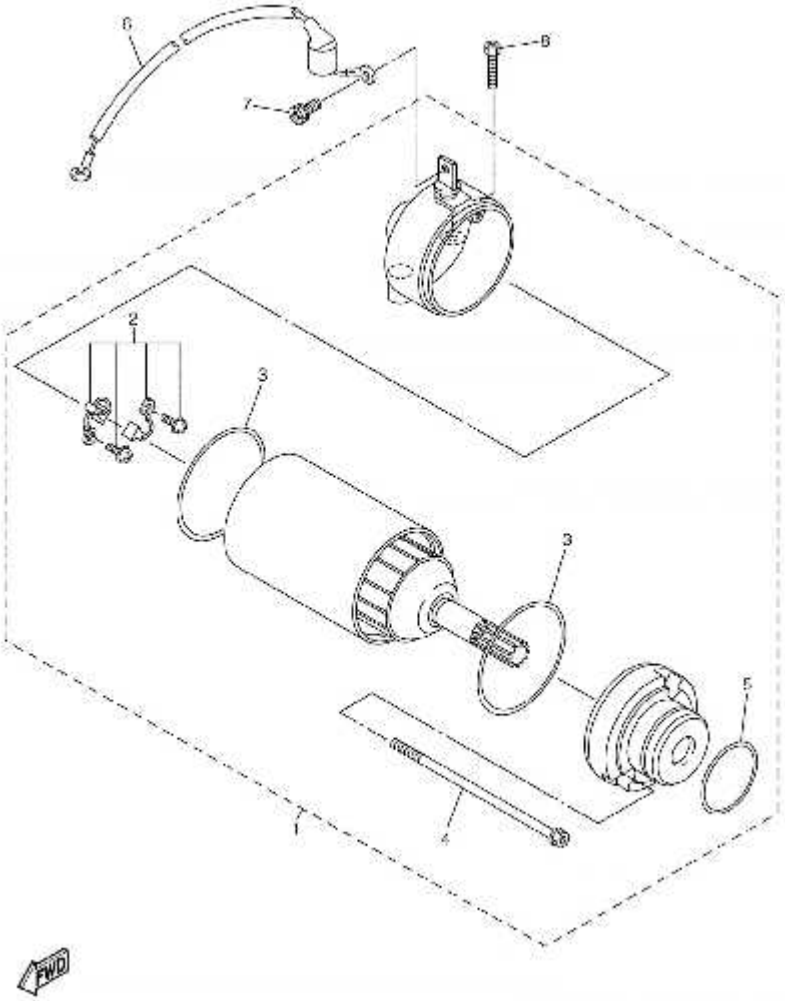
6
8
7
2
3
3
5
1
4
FWD

Nº	DESCRIPCION / DESCRIPTION	250		Cant
1	MOTOR ASSY	5UM-81890-10		1
2	.BRUSH SET	5UM-81801-10		1
3	.GASKET	5UM-81861-00		2
4	.SCREW 2	5UM-81828-10		2
5	.O-RING	93210-25711		1
6	CORD COMP.	5UM-8183G-20		1
7	BOLT 2	5TJ-81828-01		1
8	BOLT	91312-06025		2

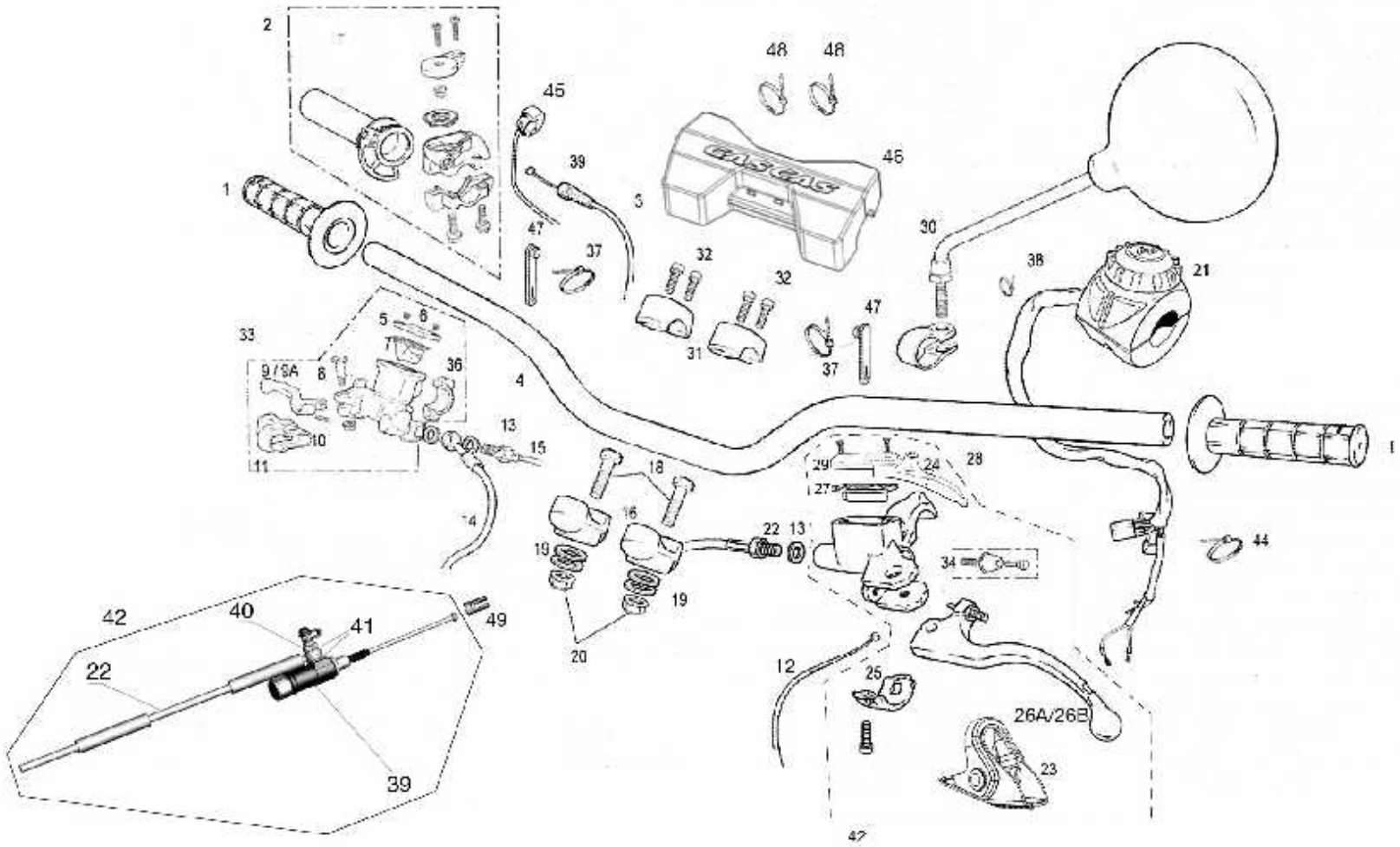
2
1
45
39
3
47
37
48
48
46
32
32
31
37
47
30
38
21
33
5
6
9/9A
8
36
4
10
11
13
15
14
18
16
19
20
19
22
13
29
27
24
28
34
44
42
40
41
49
22
39
12
25
26A/26B
23
47

Nº	DESCRIPCION / DESCRIPTION	250		Cant
1	JUEGO DE EMPUÑADURAS / C798HANDLEBAR GRIP (PAIR)	BE261002511		1
2	PUÑO DE GAS / TWIST GRIP	BFS260002510		1
3	CABLE DE GAS / THROTTLE CABLE	BFS785002510		1
4	MANILLAR COMPLETO / STEERING HANDLEBAR SET	BE250002511		1
5	TAPA BOMBA FRENO / BRAKE PUMP COVER	BC25922210		1
6	TORNILLO TAPA BOMBA / BRAKE PUMP SCREW	BC25922217		2
7	GOMA ANTIESPUMANTE / NO-FOAM RUBBER	BC25922216		1
8	TORNILLO ESPECIAL / SPECIAL SCREW	BC25922212		1
9A	MANETA FRENO TT 250 / FRONT BRAKE TT 250	BC250022045R		1
10	TENSOR MANETA BOMBA / PUMP LEVER TENSOR	BC25922218		1
11	GUARDAPOLVO / DUST COVER	BC25922213		1
12	CABLE DESCOMPRESOR / DESCOMPRESSOR CABLE	5UM-26334-E0		1
13	ARANDELA LATIGUILLO 10X14X1 / HOSE WASHER 10X14X1	BE25622007		3
14	LATIGUILLO FRENO DELANTERO / FRONT BRAKE HOSE	BE250422002		1
15	INTERRUPTOR STOP BOMBA / PUMP STOP SWITCH	BE250334003		1
16	BRIDA SUJECIÓN MANILLAR INFERIOR / HANDLEBAR CLAMP (LOWER)	BE250614013		2
17	KIT PISTÓN BOMBA FRENO “A” / “A” BRAKE PUMP PISTON KIT	BC25922219		1
18	*TORNILLO ESPECIAL 10X45 / 10X45 SPECIAL BOLT	T0201045		2
19	DISTANCIADOR BRIDA INFERIOR MANILLAR EC2003 / CLAMP HANDLEBAR SPACER	BE250314035		4
20	TUERCA CILINDRO 8.8 ESP. 10/150C13 / NUT CYLINDER M10	T3110003		2
21	CONMUTADOR LUZ / LIGHT SWITCH	EE10000032511		1
22	LATIGUILLO EMBRAGUE / CLUTCH HOSE (L=1120mm)	BF45-00012-2512		1
23	GUARDAPOLOVO / CAP	BF45-00008-2512		1
24	LEVA CHOKE /CHOKE LEVER	BF45-00007-2512		1
25	BRIDA SUJECIÓN / MOUNTING BRACKET	BF45-00006-2512		1
26A	MANETA EMBRAGUE CORTA / SHORT CLUTCH LEVER	BF45-00002-2512		1
26B	MANETA EMBRAGUE LARGA (SERIE) / LONG CLUTCH LEVER (STANDARD)	BF45-00003-2512		1
27	MEMBRANA DEPÓSITO / RESERVOIR MEMBRANE	BF45-00009-2512		1
28	BOMBA EMBRAGUE HIDRÁULICO / HYDRAULIC CLUTCH PUMP	BF45-00001-2512		1
29	TAPA BOMBA EMBRAGUE / CLUTCH PUMP COVER	BF45-00005-2512		1
30	ESPEJO RETROVISOR / REAR-VIEW MIRROR	L300760		2
31	BRIDA SUJECIÓN MANILLAR SUPERIOR / HANDLEBAR CLAMP (UPPER)	BE250614012		2

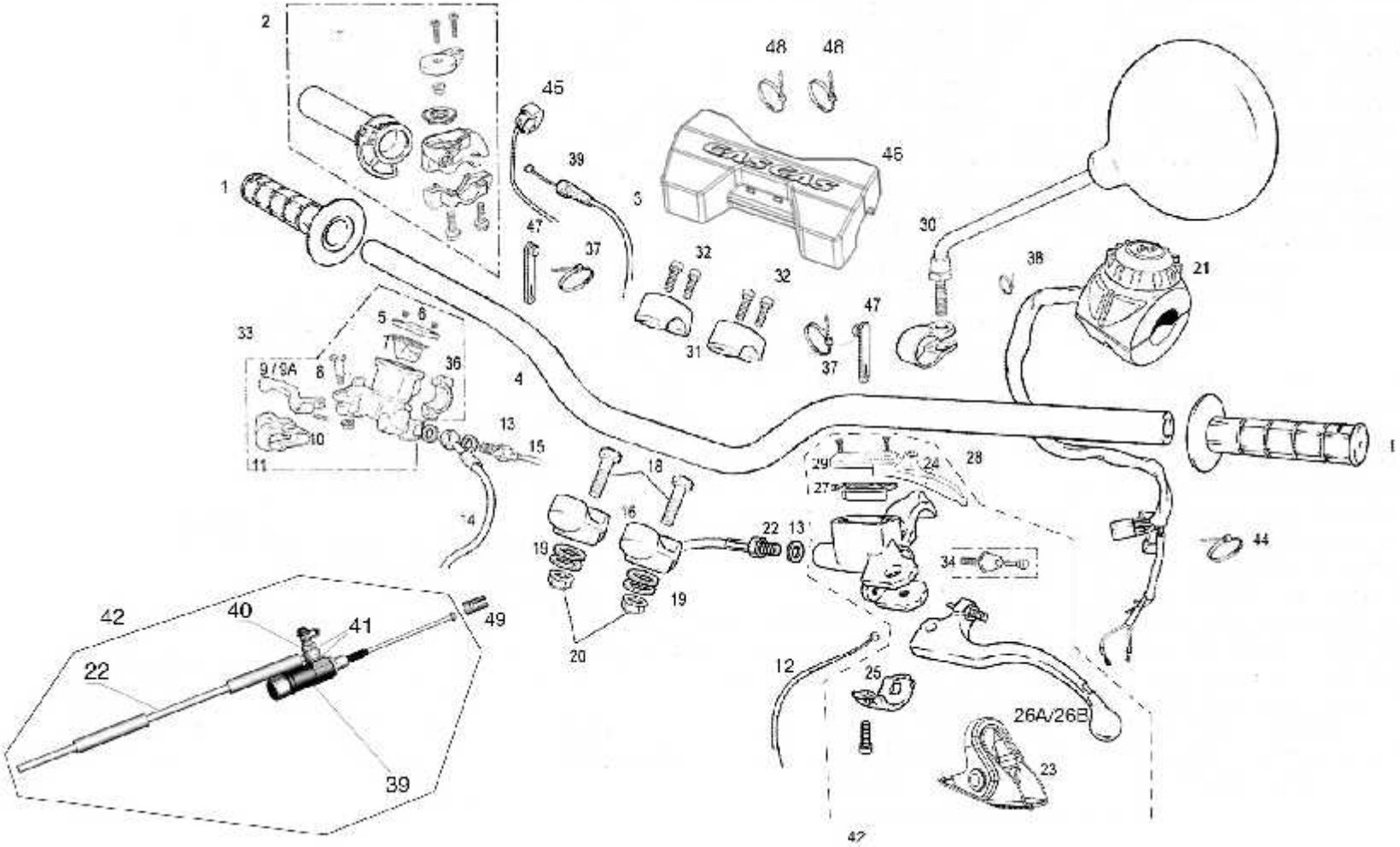
2
1
45
39
3
47
37
48
48
46
32
32
31
37
47
30
38
21
33
5
6
7
9/9A
8
36
4
10
11
13
15
14
18
16
19
19
20
22
13
29
27
24
28
34
44
42
40
41
49
22
39
12
25
26A/26B
23
47

Nº	DESCRIPCION / DESCRIPTION	250		Cant
32	TORNILLO SUJECIÓN BRIDA MANILLAR 8X35 / CLAMP SCREW 8X35	T0308035		4
33	BOMBA FRENO DELANTERO / FRONT BRAKE PUMP SET	BC25922008/2		1
34	KIT PISTÓN 9,5 / PISTON KIT 9,5	BF45000042512		1
36	BRIDA / CLAMP	BC25922211		1
37	BRIDA GRANDE / BIG CLAMP	BE25634009		2
38	BRIDA PEQUEÑA / LITTLE CLAMP	BE25634010		1
39	CABLE DE GAS EC 250 4T	BFS785002510		1
40	SANGRADOR / BLEEDER	BF45000112511		1
41	ARANDELA RACOR	T4008012		2
42	CTO. EMBRAGUE HIDRÁULICO-MECÁNICO MAGURA 9,5 (163) / MAGURA 9,5 (163) HYDRAULIC-MECANIC ASSY	BF45000002512		1
44	BRIDA UNEX CORTA 2221-0 2.5X98 / SHORT UNEX CLAMP 2221-0 2.5X98	BE25634010		1
45	INTERRUPTOR CONTACTO CON BOTON ARRANQUE / START BUTTON SWITCH CONTACT	BFS450734033		1
46	PROTECTOR MANILLAR DIAMETRO VARIABLE / VARIABLE DIAMETER ANDLEBAR PROTECTOR	BE250724004		1
47	GOMA SUJECIÓN CABLEADO / CABLED RUBBER HOLDER	BFS450320067		2
48	BRIDAS SERRETAS / CLAMP	BE25634007		2
49	FIJACIÓN / SLEEVE	BF45000132512		1

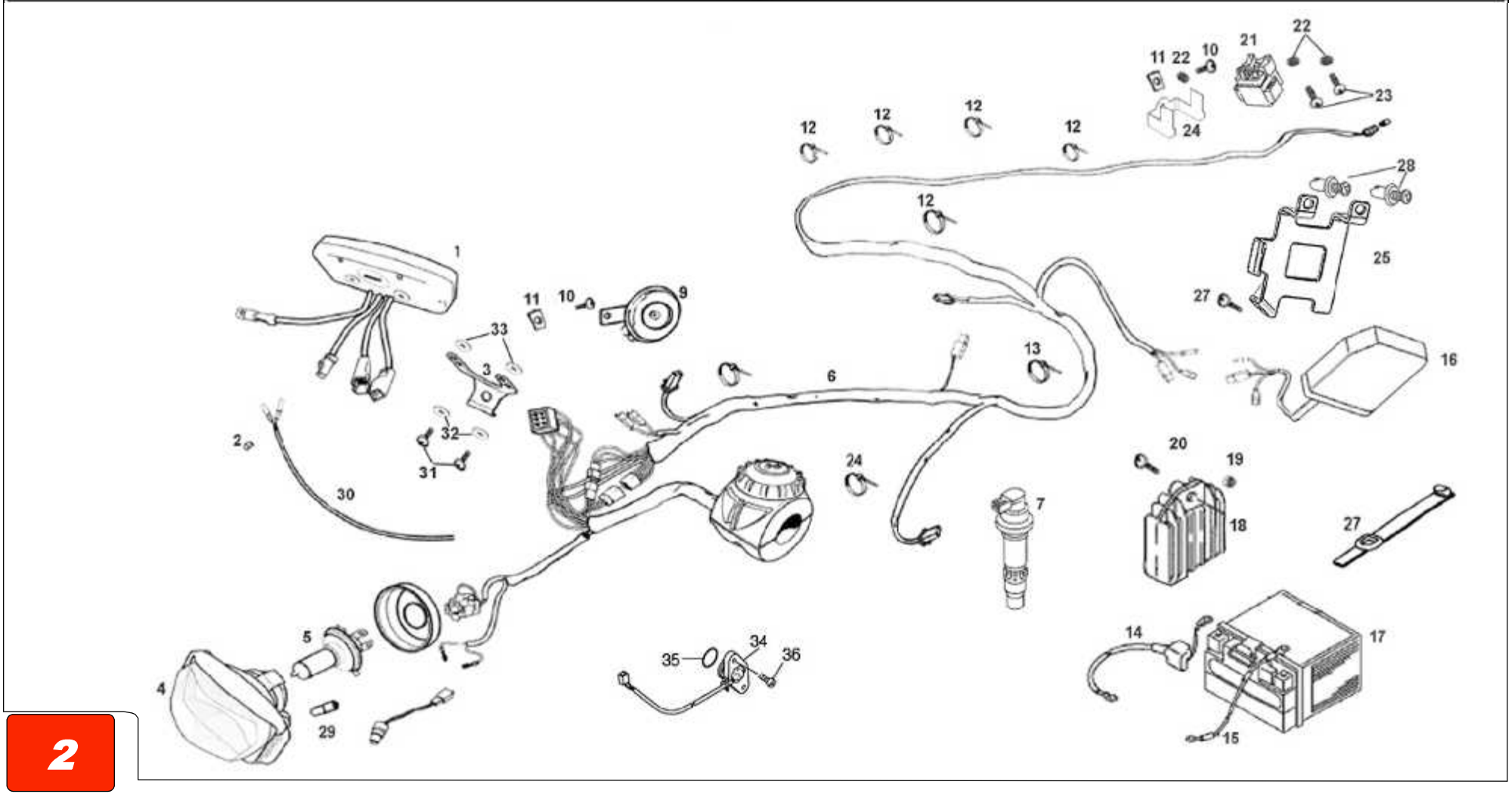
1
2
3
4
5
6
7
9
10
11
12
13
14
15
16
17
18
19
20
21
22
23
24
25
27
28
29
30
31
32
33
34
35
36

Nº	DESCRIPCION / DESCRIPTION	250		Cant
1	CTO. MULTIFUNCIÓN ENDURO / ENDURO MULTIFUNCTION SET	EE600002513		1
2	PASACABLES CTA. KMS. / SPEED CABLE HOSE	BE250334053		3
3	SOPORTE MULTIFUNCIÓN / MULTIFUNCTION SUPPORT	BFS450634045		1
4	OPTICA HALOGENA / OPTIC HALOGEN	EE200002511		1
5	BOMBILLA HALOGENA / HALOGEN LAMP	L300125		1
6	INSTALACION LUZ / LIGHT INSTALATION	EE10000012511		1
7	BOBINA / IGNITION COIL	5UL-82310-10		1
9	CLAXON / KLAXON	EFS204004508		1
10	ULS 6X16 ARAND. INC. / BOLT ULS 6X16 WASHER	T0556016		2
11	GRAPA NUT 6 / 6 NUT	T2606000		2
12	BRIDA SERRETA / FLANGE	BE25634009		5
13	BRIDA SERRETA CORTA / SHORT FLANGE	BE25634010		1
14	CABLE POSITIVO / POSITIVE CABLE	EFS400152510		1
15	CABLE MASA / MASA CABLE	EFS400102510		1
16	CDI	5UM-85540-L1		1
17	BATERIA / BATERY	BFS400134080/3		1
18	REGULADOR /REGULATOR	5UM-81960-E0		1
19	TUERCA M6 ALTA CON ARAND. / NUT METRIC 6 AND WASHER	T2106002		1
20	ULS 6X20 ARANDELA INCORP. / BOLT ULS 6X20 WASHER	T0556020		1
21	RELE ARRANQUE / STARTER RELAY	BFS400134075/2		1
22	ARANDELA ABANICO / FAN WASHER	T4006020		3
23	ULS 6X10 / BOLT 6X10 ULS	T0506010		2
24	SOPORTE RELE / SUPORT RELAY	BFS450480119		1
25	SOPORTE CDI / CDI SUPORT	EE551002508		1
26	GOMA CDI / CDI RUUBER	BE250034100		1
27	TORNILLO CHAPA / SCREW PLATE	T0706316		1
28	CLIP / CLIP	MFS450580013/2		2
29	BOMBILLA LUZ POSICIÓN / POSITION LIGHT	L300126		1
30	CABLE MULTIFUNCION / MULTIFUNTION CABLE	BE250634050		1
31	ULS 4X10 / SCREW ULS 6X10	T0554010N/3		2
32	ARANDELA GOMA MULTIFUNCION / MULTIFUNTION RUBBER WASHER	EE650102508		2
33	ARANDELA 4X12X1 / 4X12X1 WASHER	T4004012		2

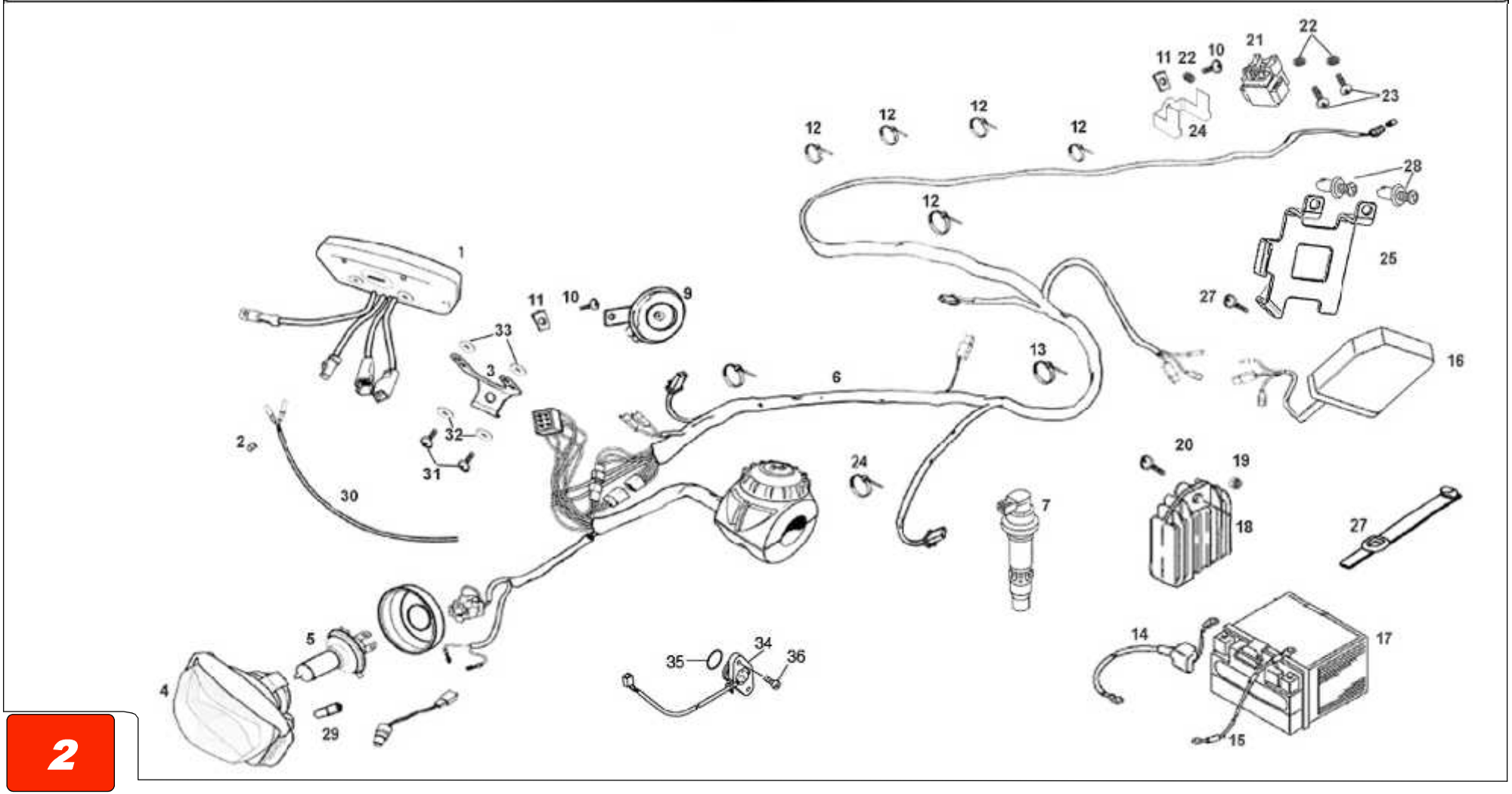
1
2
3
4
5
6
7
9
10
11
12
13
14
15
16
17
18
19
20
21
22
23
24
25
27
28
29
30
31
32
33
34
35
36

Nº	DESCRIPCION / DESCRIPTION	250		Cant
34	INTERRUPTOR DE PUNTO MUERTO / NEUTRAL SWITCH ASSY	5TJ-82540-01		1
35	TÓRICA / O-RING	93210-21001		1
36	TORNILLO, TAPA / SCREW, BINDING	90154-05022		2

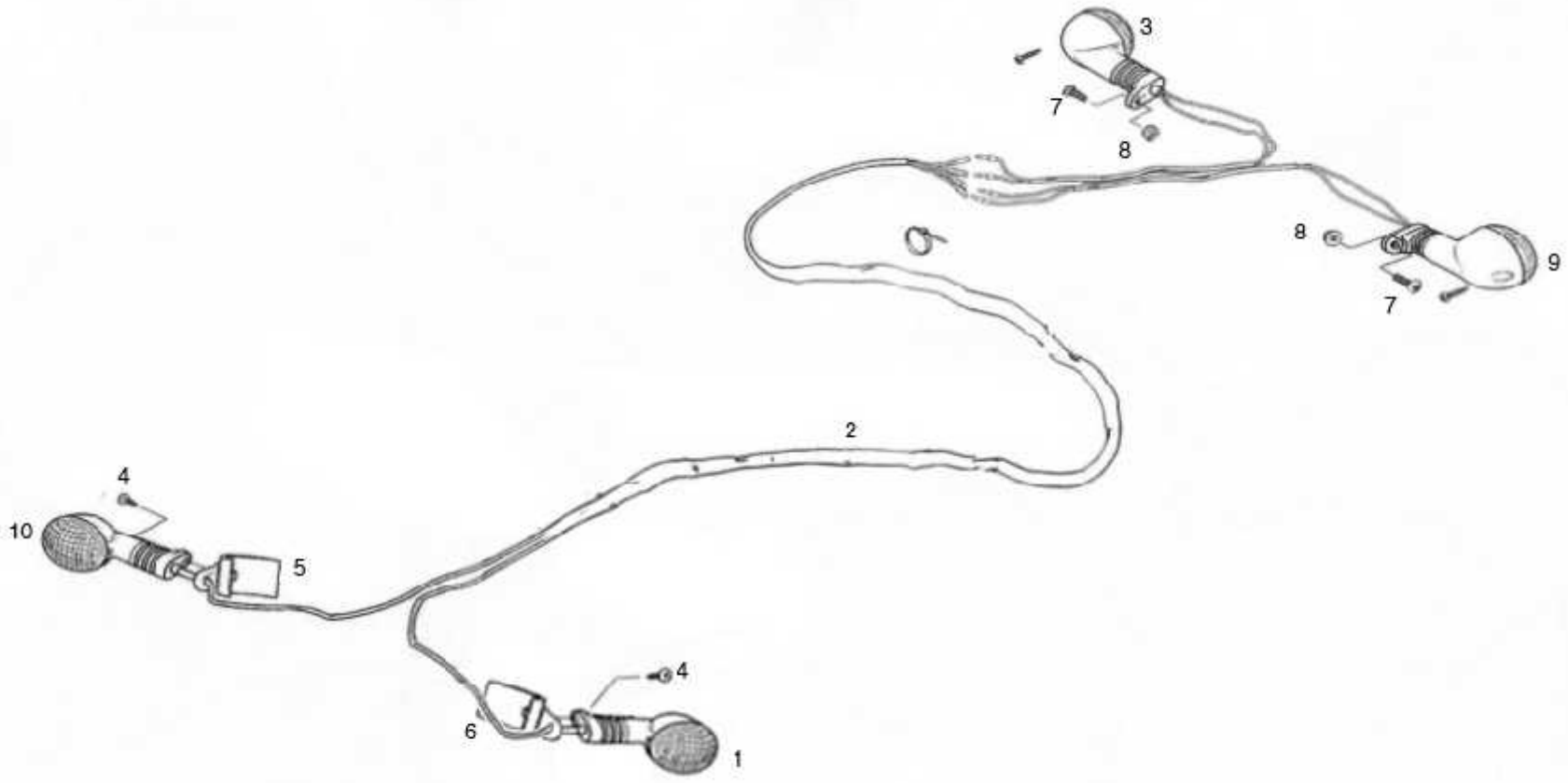
3
7
8
8
9
7
2
4
10
5
4
6
1

Nº	DESCRIPCION / DESCRIPTION	250		Cant
1	INTERMITENTE IZQUIERDO DELANTERO / LEFT FRONT INDICATOR	BE250634019		1
2	INSTALACIÓN INTERMITENTES / INDICATOR INSTALLATION	EE1000022511		1
3	INTERMITENTE DERECHO TRASERO / RIGHT REAR INDICATOR	BE250634021		1
4	TORNILLO CHAPA / SPECIAL SCREW	T0706316		2
5	SOPORTE INTERMITENTE DEL. DER. / RIGHT FRONT INDICATOR HOLDER	BE250134017		1
6	SOPORTE INTERMITENTE DEL. IZDO / LEFT FRONT INDICATOR HOLDER	BE250134020		1
7	ULS 6X16 NEGRO / 6X16 ULS BLACK BOLT	T0506016N		2
8	TUERCA CON ARANDELA M6 / NUT WITH WASHER M6	T2206000		3
9	INTERMITENTE IZQUIERDO TRASERO / LEFT REAR INDICATOR	BE250634022		1
10	INTERMITENTE DERECHO DELANTERO / RIGHT FRONT INDICATOR	BE250634018		1

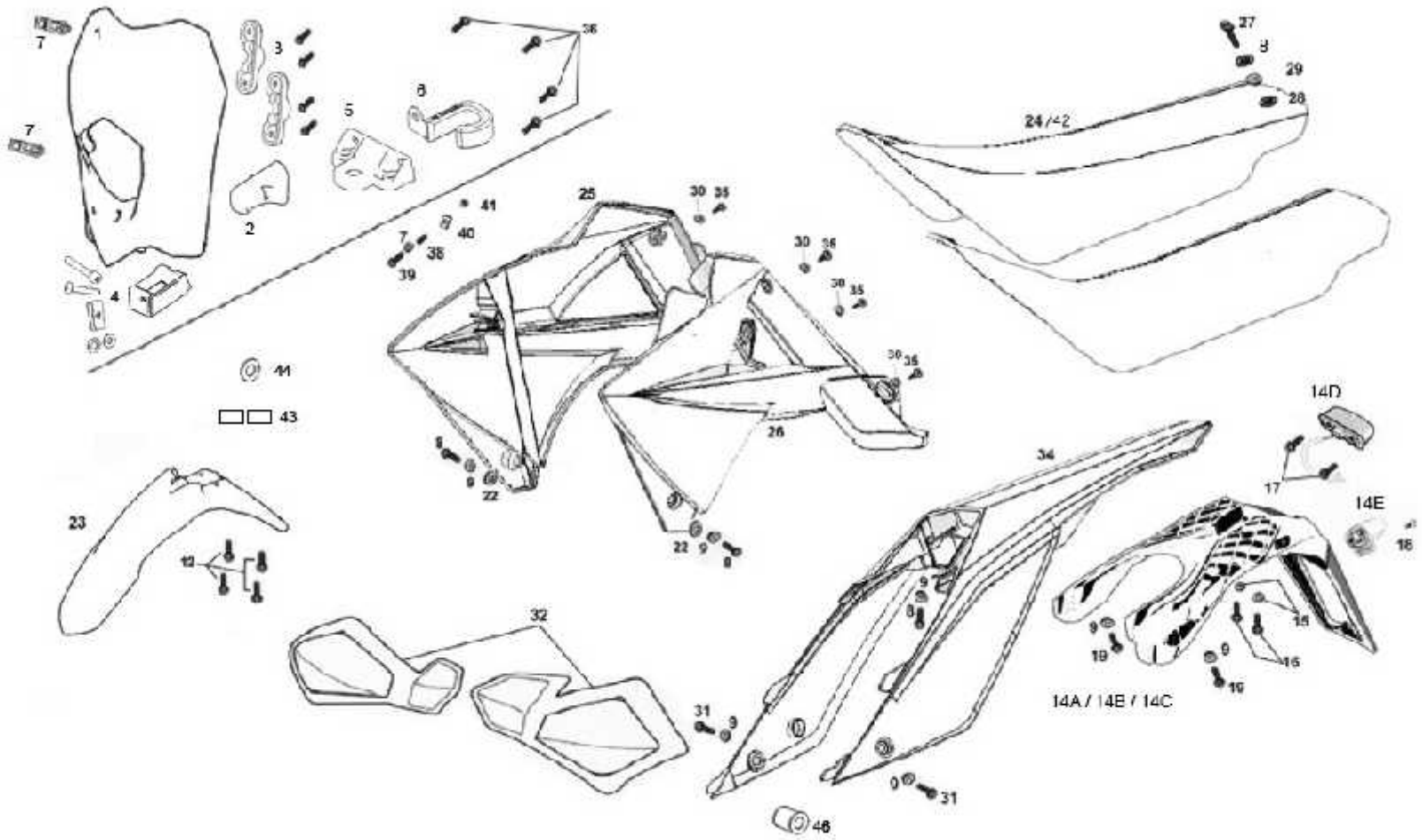
24/42
14D
14E
14A / 14B / 14C

Nº	DESCRIPCION / DESCRIPTION	250		Cant
1	PORTAFAROS DELANTERO BLANCO / FRONT WHITE HEADLAMP	BE905002511		1
2	GUÍA LATIGUILLO SUPERIOR	BE905512511		1
3	SOPORTE FARO /	BE905102511		2
4	ALARGO REGULADOR ÓPTICA /	BE905302511		1
5	SOPORTE FARO GUARDABARROS /	BE911002511		1
6	GUÍA LATIGUILLO /	BE215202511		1
7	GOMA SUJECIÓN FARO / RUBBER SECURIN HEADLAMP	BE25636015		2
8	CASQUILLO SILLIN ALUMINIO ROJO / ALUMINIUM SEAT RED CAP	BE940602510		1
9	CASQUILLO / BUSH	BE250032060		8
10	TORNILLO ESPECIAL 6X14 / SPECIAL SCREW 6X14	T0206014		4
11	CASQUILLO TAPA / RADIATOR CAP COVER	BE250032060		11
12	TORNILLO / SCREW	T0206020		4
13	CASQUILLO ESPECIAL 6X20 / SPECIAL SCREW 6X20	T0206020		4
14A	PORTA MATRICULA / TUITION SUPPORT	BE25072003		1
14B	PORTA MATRICULA COMPLETO / KIT TUITION SUPPORT	BE25072003CT		1
14C	PORTA MATRICULA COMPLETO RACING / RACING KIT TUITION SUPPORT	BE25072003USCT		1
14D	LUZ PILOTO / PILOT LIGHT	BE250734015		1
14E	LUZ MATRÍCULA / LIGHT ENROLLMENT	BE250734124		1
15	ARANDELA 5X12X1 / 5X12X1 WASHER	T4005012		2
16	TORNILLO ROSCA PLÁSTICO / PLASTIC SCREW THREAD	BE250728058		2
18	UFK M5X12 / 5X12 UFK	T1003009		2
19	TORNILLO ESPECIAL 6X20 / SPECIAL SCREW 6X20	T0315012		1
20	ULS 6X16 / 6X16 ULS	T0206020		4
21	TUERCA ESTRIADA M6 / GROOVED NUT METRIC 6	T0556016		1
22	ARANDELA NYLON / NYLON WASHER	T06065017		2
23	GUARDABARROS DELANTERO BLANCO / WHITE FRONT FENDER	BE910002511		1
24	FUNDA SILLIN / SEAT COVER	BE940012510		1
25	CTO. TAPA RADIADOR DRCH. / RIGHT RADIATOR COVER ASSY	BF90000024513		1
26	CTO. TAPA RADIADOR IZQ. / LEFT RADIATOR COVER ASSY	BF90000034513		1
27	TORNILLO ESP. 6X30 / ESPECIAL SCREW 6X30	T0206030		1
28	ARANDELA PLÁSTICO /PLASTIC WASHER	BE250710213		1
29	CASQUILLO SILLIN / SEAT CAP	BE25610007		1
30	CASQUILLO TAPA RADIADOR / RADIATOR CAP COVER	BE915502510		4

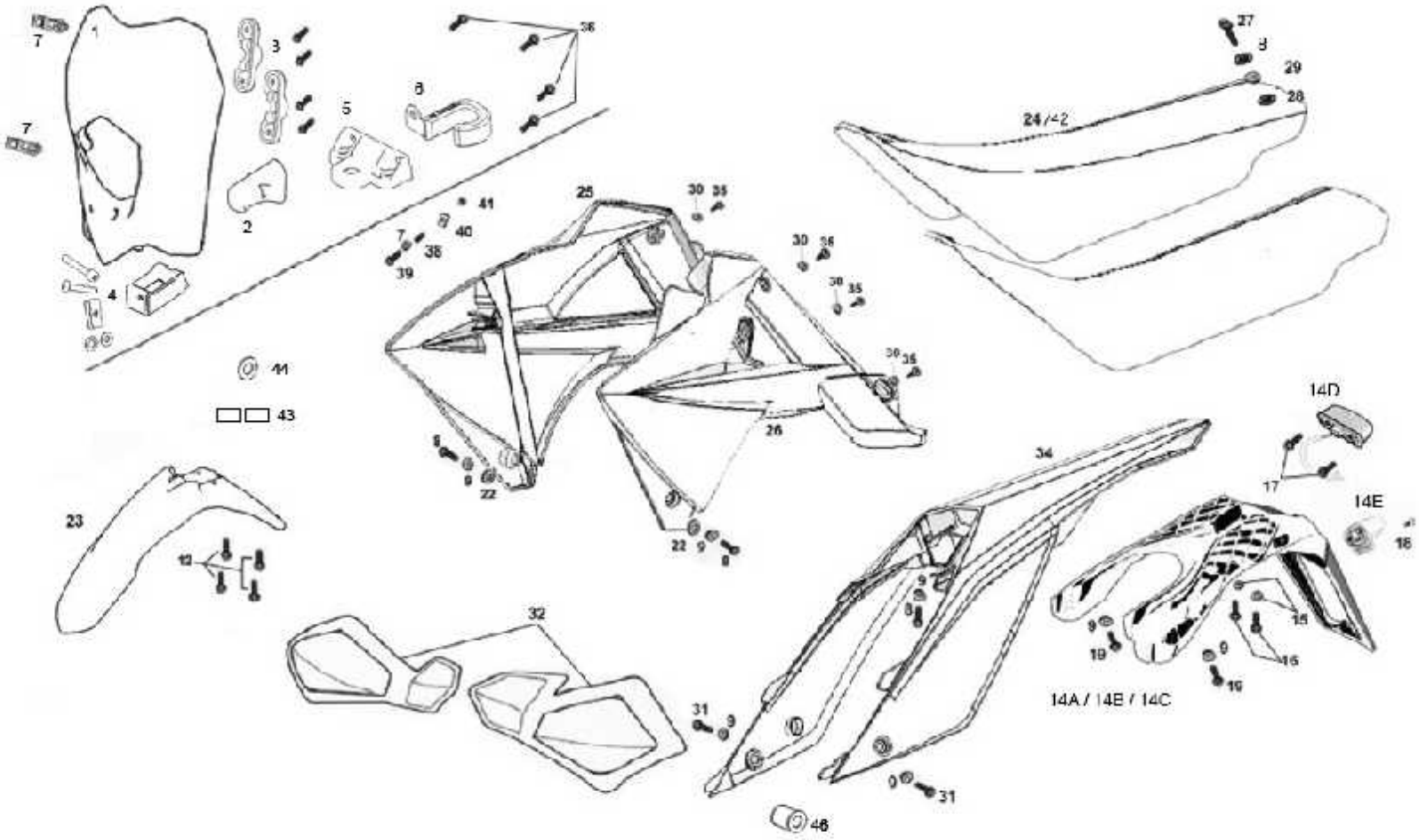
14A / 14B / 14C
14D
14E

Nº	DESCRIPCION / DESCRIPTION	250		Cant.
31	TORN. ESPECIAL 6X16 / SPECIAL SCREW 6X16	T0206016		2
32	CTO. PARAMANOS / SET FOR HANDS	BE90000223012		1
34	CTO. GUARDABARROS TRASERO / REAR FENDER ASSY	BF90000044513		1
35	TORN. ESPECIAL 5X10 / SPECIAL SCREW 5X10	T0205010		4
36	TORN. ROSCA PLASTICO / SCREW	T0804012		4
37	TORNILLO ROSCA PLASTICO 4.6X12	T0804012/2		2
38	MUELLE TORNILLO REGULADOR /SCREW SPRING REGULATOR	BX250020026		1
39	ALLEN 4X25 / 4X25 ALLEN	T0304025		1
40	GRAPA REGULACION OPTICA / REGULATING OPTICAL STAPLE	BX250020029		1
41	TUERCA AUTOBLOCANTE M4 / LOCKING NUT METRIC 4	T2104000		1
42	SILLIN / SEAT	BE940002510		1
43	TUERCA M6 ALTA / HIGH NUT METRIC 6	T2106002		2
44	GOMA / GROMMET	BE250026005		1
45	SOPORTE FARO GUARDABARROS DELANTERO /	T0206014		2
46	CAPUCHÓN GOMA / RUBBER CAP	BFS925504510		1

GASGAS

EC-250F / 300F 2013

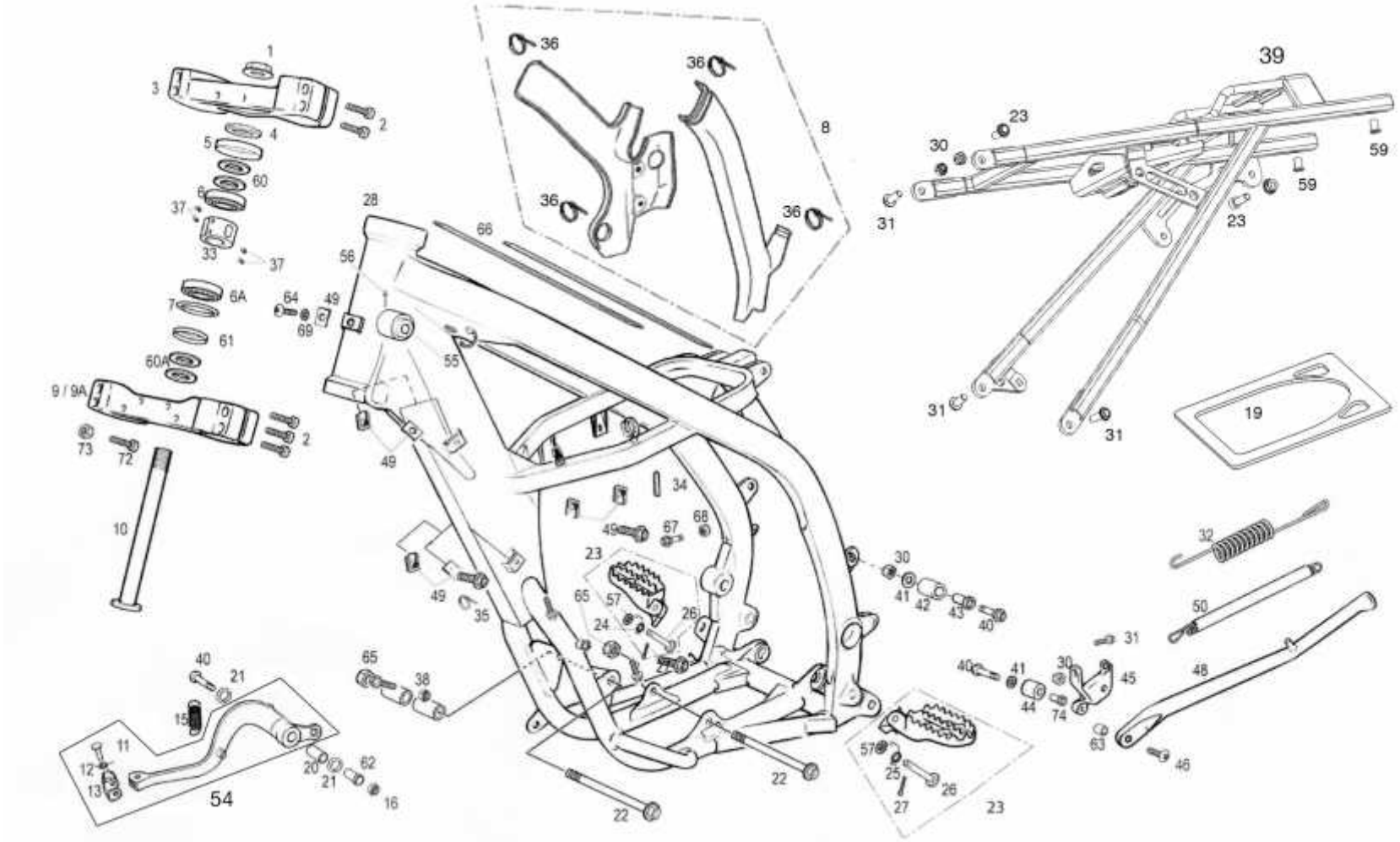

Nº	DESCRIPCION / DESCRIPTION	250		Cant
1	TUERCA DIRECCIÓN / STEERING SHAFT NUT	BE25610030		1
2	ALLEN 7X30 / 7X30 ALLEN BOLT	T0307030		10
3	BRIDA SUSPENSIÓN SUPERIOR / FORK CLAMP (UPPER)	BE220002510		1
4	TUERCA DIRECCIÓN INFE. / LOWER STEERING SHAFT NUT	BE25610029		1
5	GUARDAPOLVO COJINETE DIRECCIÓN / BEARING DUST COVER	BE25610126		1
6	COJINETE DIRECCIÓN / STEERING BEARING	BE25610008		1
6A	COJINETE DIRECCIÓN / STEERING BEARING	BE250610008		1
7	TÓRICA DIRECCIÓN 50X5 / STEERING O'RING	BE25610012		1
8	CONJUNTO PROTECTOR DE CHASIS / FRAME PROTECTION SET	BE250520030CT		1
9	BRIDA SUSPENSIÓN INFERIOR / FORK CLAMP (LOWER)	BE210001210		1
10	EJE DIRECCIÓN / STEERING SHAFT	BE250614003		1
11	ALLEN 5X12 / 5X12 ALLEN	T0305012		2
12	PEDAL FRENO /	BE130002510		1
13	PUNTERA PEDAL FRENO / BRAKE PEDAL END	BE130102510		1
15	MUELLE PEDAL FRENO / BRAKE PEDAL SPRING	BE25610023		1
16	TORNILLO 10X120 / 10X120 SCREW	T0310120		1
17	TORNILLO 10X130 / 10X130 SCREW	T0310130		1
18	TUERCA M10 / M10 NUT	T3110003		2
19	ESPUMA BATERIA / BATERY FOAM	BFS450734090		1
20	GLACIER PEDAL FRENO / BRAKE PEDAL BEARING	BE250010009		1
21	TÓRICA PEDAL ARRANQUE D 11X2 / 11X2 KICKSTART O'RING	ME250036063		2
22	TORNILLO ESP. CON VALONA / SPECIAL SCREW 6X20	T0606020		1
23	KIT ESTRIBOS / FOOTREST SET	BE14000CT2509		1
24	MUELLE ESTRIBO DERECHO / RIGHT FOOTREST SPRING	BE25610037		1
25	MUELLE ESTRIBO IZQUIERDO / LEFT FOOTREST SPRING	BE25610038		1
26	CASQUILLO ESTRIBO / FOOTREST BUSHING	BE25610006		2
27	CLAVILLA ZINC 3X35 / 3X35 ZINC PIN	BE25622022		2
28	CHASIS ENDURO / ENDURO FRAME	BF10000032512		1
29	TORNILLO ESPECIAL 8X25 / 8X25 SPECIAL SCREW	T0208025		1
30	TUERCA AUTOBLOCANTE M8 BAJA / LOW M8 SELF-LOCKING NUT	T2108001		3
31	TORNILLO ESPECIAL 8X20 / SPECIAL SCREW 8X20	T0208020		3
32	MUELLE EXTERIOR CAVALLETE / SUPPORT OUTER SPRING	BE250510039		1
33	CASQUILLO ANTIRROBO EJE DIRECCIÓN / STEERING AXLE ANTI-THEFT BUSHING	BE242002510		1
34	FUNDA CLIP 1X70 CHASIS / CHASSIS CLIP SLEEVE 1X70	BE250411000		3

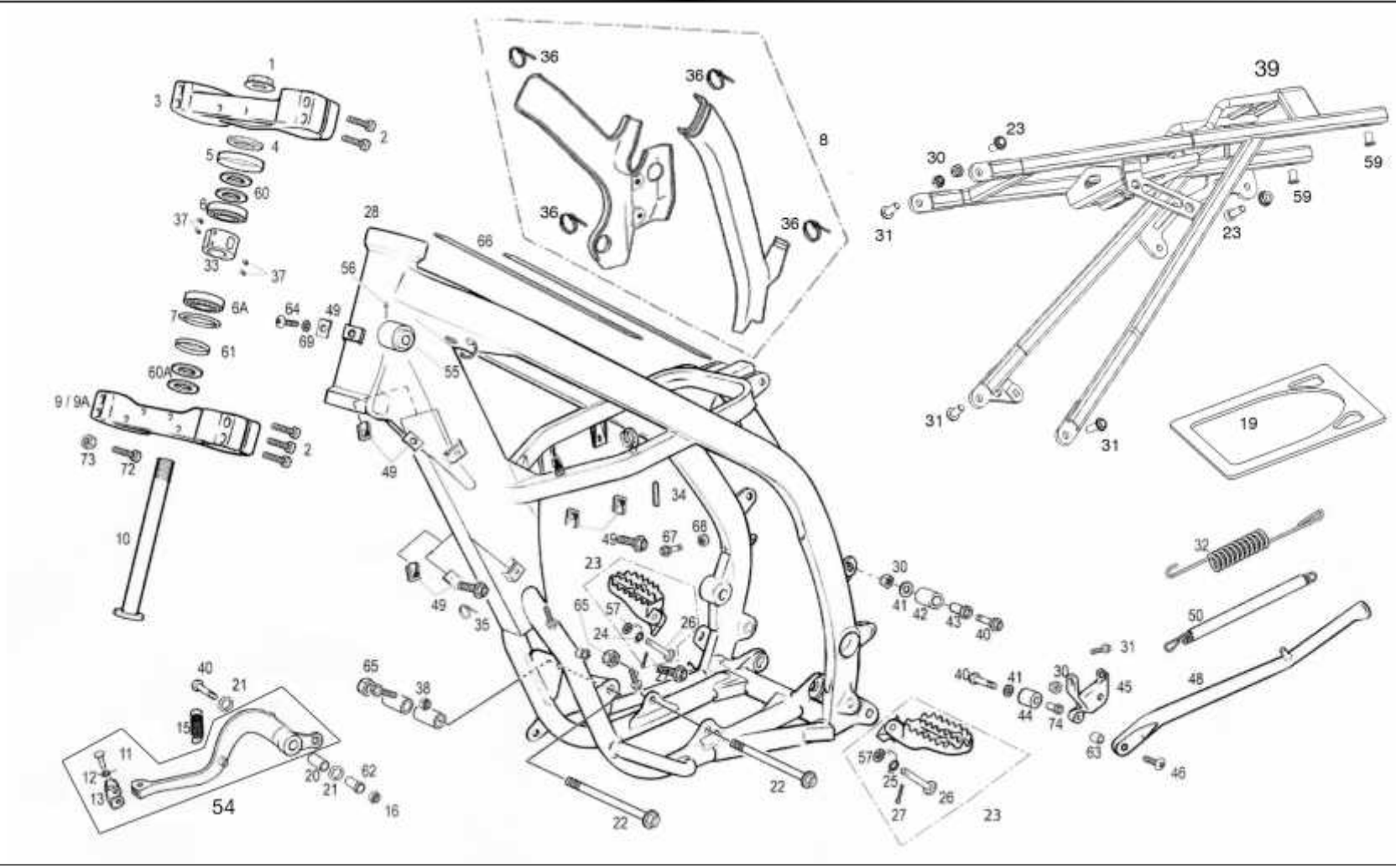
1
2
3
4
5
60
6
37
33
37
7
6A
64
49
69
61
60A
9 / 9A
2
73
72
10
28
66
56
55
49
36
36
36
36
8
39
23
30
59
59
23
31
31
31
19
34
49
67
68
23
65
57
26
24
27
49
35
65
38
40
21
15
11
12
13
54
20
21
62
16
22
22
57
25
26
27
23
30
41
42
43
40
32
50
31
40
41
30
45
44
74
63
48
46

Nº	DESCRIPCION / DESCRIPTION	250		Cant
35	BRIDA UNEX 2274 4.8X20 / 2274 UNEX CLAMP 4.8X20	BE25634009		1
36	BRIDA UNEX 2274 4.8X36 / 2274 UNEX CLAMP 4.8X36	BE25634007		4
37	TORNILLO PRISIONERO M6X8 / SET SCREW M6X8	BE250310073		4
38	ADHESIVO ESPUMA DEPOSITO / STICKY FOAM I DEPOSIT	BFS172102510		1
39	COLA CHASIS / FRAME TAIL	BFS120004511		1
40	TORNILLO ESPECIAL 8X45 / 8X45 SPECIAL SCREW	T0208045		1
41	ARANDELA 8X20X1,5 / 8X20X1.5 WASHER	T4008020		2
42	RODILLO GUIA CAD. SUP. / UPPER CHAIN ROLL	BE25610014		1
43	CASQUILLO ROD. 6,25X12X25 / 6.25X12X25 BUSHING	BE250712016		1
44	RODILLO GUIA CADENA 13,5X32X23,5 / LOWER CHAIN ROLL	BE25610032		1
45	SOPORTE CABALLETE / SIDE STAND HOLDER	BE250212023		1
46	ULS 8X30 / 8X30 ULS BOLT	T0508030		1
48	CABALLETE EC2005 / EC2005 SIDE STAND BRACKET	BE142002510		1
49	TUERCA ENJAULADA M6 / CAGED NUT M6	T2606000		5
50	MUELLE CABALLETE / SIDE STAND BRACKET SPRING	BE250410039		1
51	ARANDELA 6X20X1.5 / WASHER	T4006020		1
52	TUERCA AUTOBLOCANTE M6 ALTA / M6 SELF-LOCKING NUT HIGH	T2106002		2
54	CTO. PEDAL FRENO TRASERO / REAR BRAKE PEDAL SET	BF15-00000-2512		1
56	CTO. ANTIRROBO / STEERING LOCK	BT280210075		1
57	ARANDELA 10.5x19X2 / 10.5x19X2 WASHER	T4001019		2
58	TORNILLO ESP. 6X45 / 6X45 SPECIAL SCREW	T0206045		1
59	TUERCA REMACHABLE / RIVETABLE NUT	BE250010070		4
60	ARANDELA DIRECCIÓN / STEERING WASHER	BE25610028		2
61	CAZOLETA DIRECCIÓN / STEERING CAP	BE250610026		1
62	CASQUILLO SOPORTE PEDAL FRENO EC250 / BRAKE PEDAL SUP. BUSHING	BE250210916		1
63	CASQUILLO CABALLETE EC2001 / SIDE STAND HOLDER BUSHING	BE250112011		1
64	TORNILLO ULS 6X16 / 6X16 ULS	T0506016		1
65	TUERCA AUTOBLOCANTE M10 / M10 SELF-LOCKING NUT	T3110003		2
67	CTO. ADH. ESPUMA CHASIS / STICKY ASSEMBLY FOAM CHASSIS	BFS172002510		1
68	ARANDELA 8X16X1.5 / WASHER	T4008016		2
69	ARANDELA PLANA 6X12X1.5 / 6X12X1.5 WASHER	T4006012		2
70	ULS 6X20 CON ARANDELA ZINCADO / ULS 6X20 WITH ZINC WASHER	T0556020		2
71	ALLEN 8X20 / 8X20 ALLEN BOLT	T0308020		2

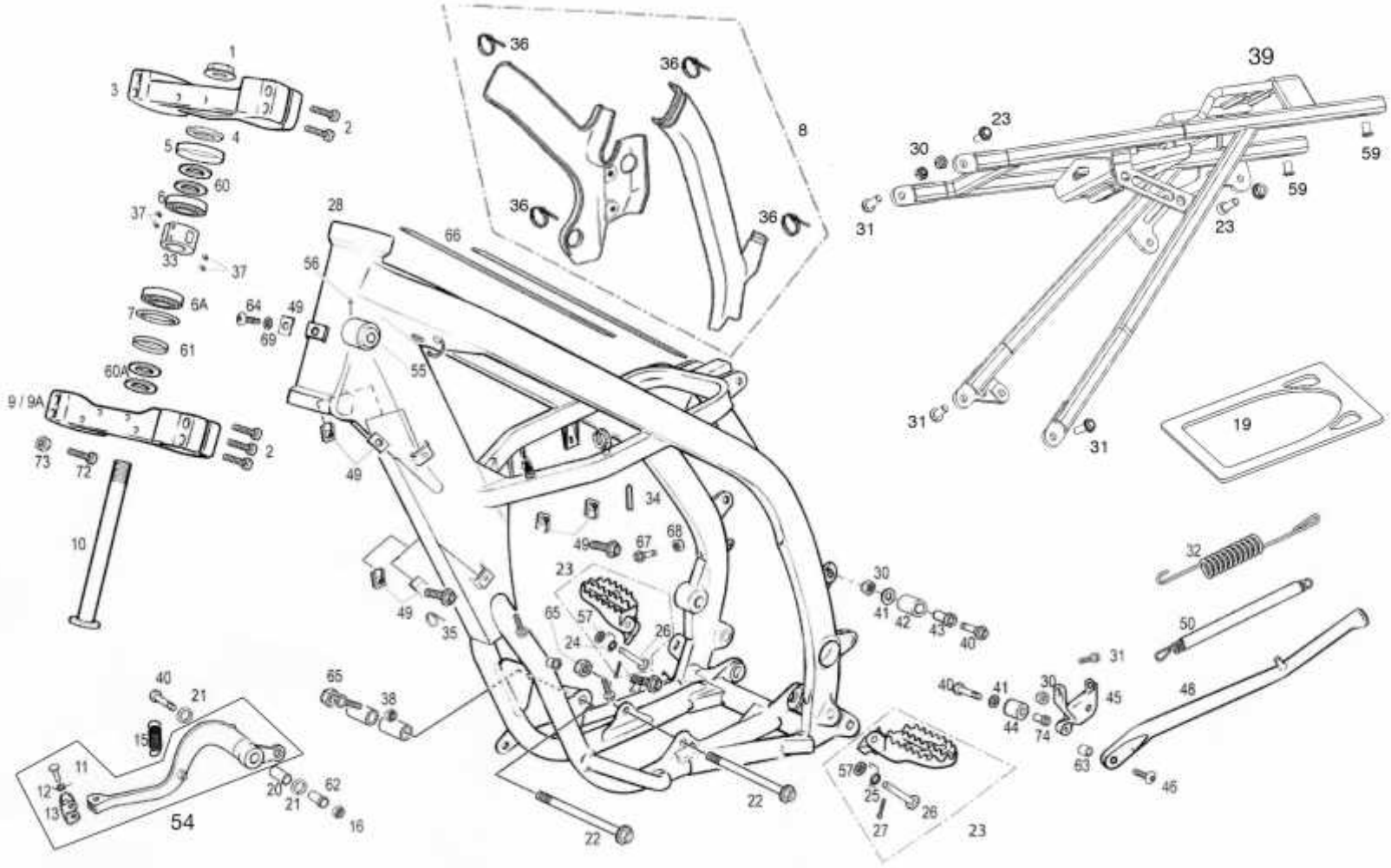
1
2
3
4
5
60
6
37
33
37
6A
7
61
60A
9 / 9A
2
73
72
10
28
66
56
64
49
69
55
49
36
36
36
36
8
39
23
30
31
59
59
23
31
31
19
34
49
67
68
23
65
57
24
26
49
35
30
41
42
43
40
32
50
31
40
41
30
45
44
74
46
63
46
40
21
15
11
12
13
54
20
21
62
16
65
38
22
22
57
25
26
27
23

Nº	DESCRIPCION / DESCRIPTION	250		Cant
72	TUERCA TOPE DIRECCIÓN M8X13X8 ZINCADO / ZINC STEERING STOPNUT M8X13X8	T2008002		2
73	CASQUILLO RODILLO 12,5X36X16	BE25612016		1

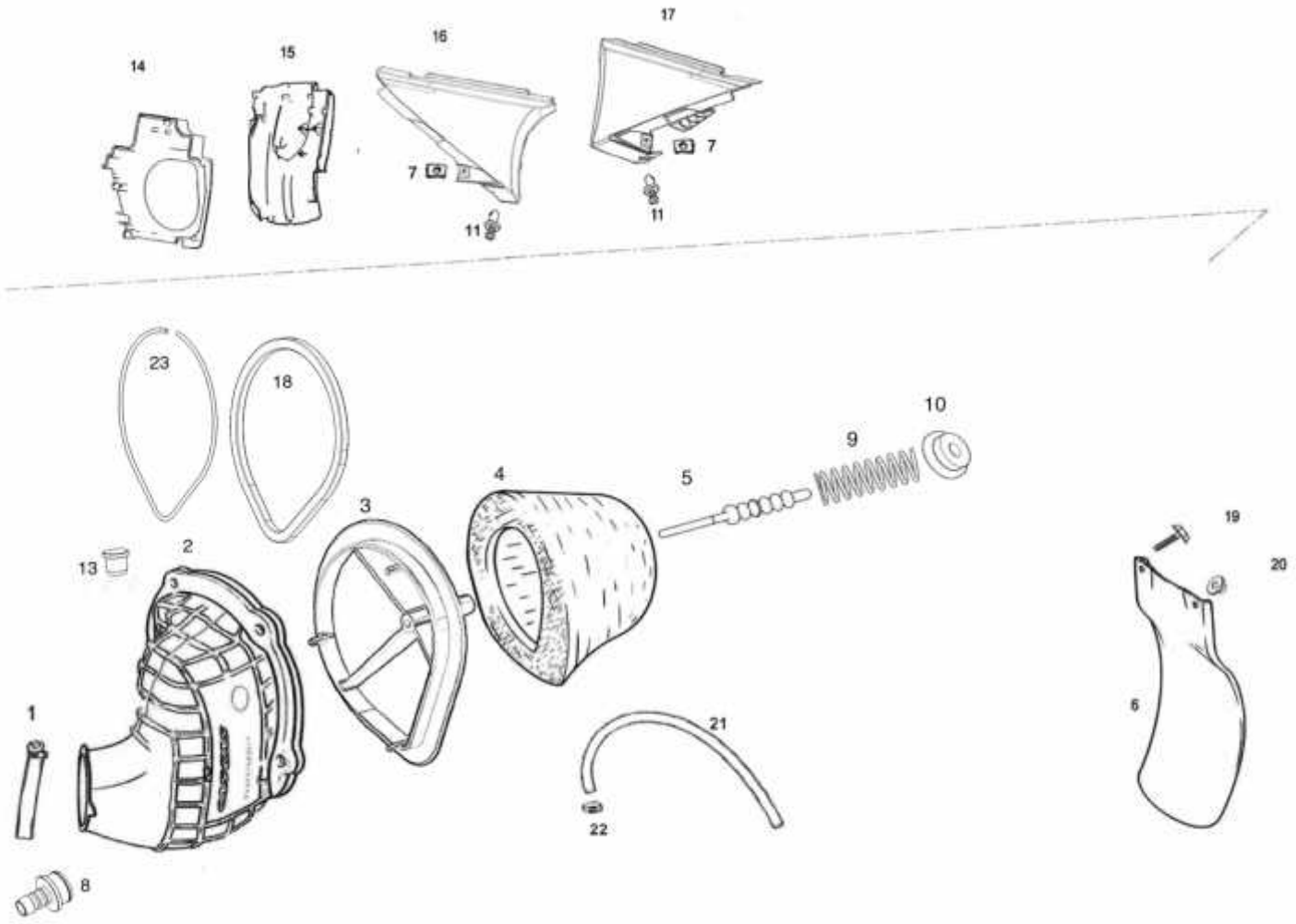
14
15
16
17
7
7
11
11
23
18
10
9
5
4
3
2
13
19
20
1
6
21
22
8

Nº	DESCRIPCION / DESCRIPTION	250		Cant
1	ABRAZADERA / CLAMP	90450-61002		1
2	GOMA TUBERA CAJA FILTRO / AIR FILTER BOX RUBBER	5UM-14453-LO		1
3	JAULA FILTRO AIRE / AIR FILTER CARRIER	BE250628002		1
4	FILTRO AIRE / AIR FILTER	BE250728000		1
5	VARILLA PALOMA FILTRO / FILTER BOLT	MF25000032512		1
6	PROTECTOR SUSPENSIÓN TRASERA / REAR SHOCK ABSORBER PROTECTOR	BE25620008		1
7	GRAPA NUT /STAPLE NUT	T2606000		2
8	CONECTOR TUBO DESVAPORIZADOR / CONNECTOR TUBE VAPORIZER	MF25000012512		1
9	MUELLE VARILLA CAJA FILTRO / SPRING FOR FILTER BOLT	BE250728051		1
10	ARANDELA NYLON TOPE MUELLE CAJA FILTRO / NYLON WASHER	BE250728052		2
11	CLIP-TORNILLO (1021) / CLIP SCREW	MFS450580013/2		2
13	TAPÓN PULMÓN / CAP	MF25000022512		1
14	TAPA CAJA FILTRO DEL./ FRONT FILTER BOX WALL	BE250728054		1
15	TAPA CAJA FILTRO TRAS./ REAR FILTER BOX WALL	BE790902510		1
16	TAPA CAJA FILTRO DRCHA./ RIGHT FILTER BOX WALL	BE926002509		1
17	TAPA CAJA FILTRO IZQ./ LEFT FILTER BOX WALL	BE931002509		1
18	ANILLO / RING	ME25000123011		1
19	TORN. ROSCA PLASTICO PROTECTOR AMORTIGUADOR / SCREW	BE250728058		2
20	CASQUILLO PROTECTOR AMORTIGUADOR / BUSH	BE250728059		2
21	TUBO DESVAPORIZADOR CULATA / TUBE DESVAPORIZADOR BUTT	MQ400280102		1
22	ABRAZADERA COBRA 15 / CLIP RECEIVES 15	L200053		1
23	ARO METÁLICO SUJECIÓN PULMÓN /STEEL RING FOR AIR BOX RUBBER	MF25-00005-2512		1

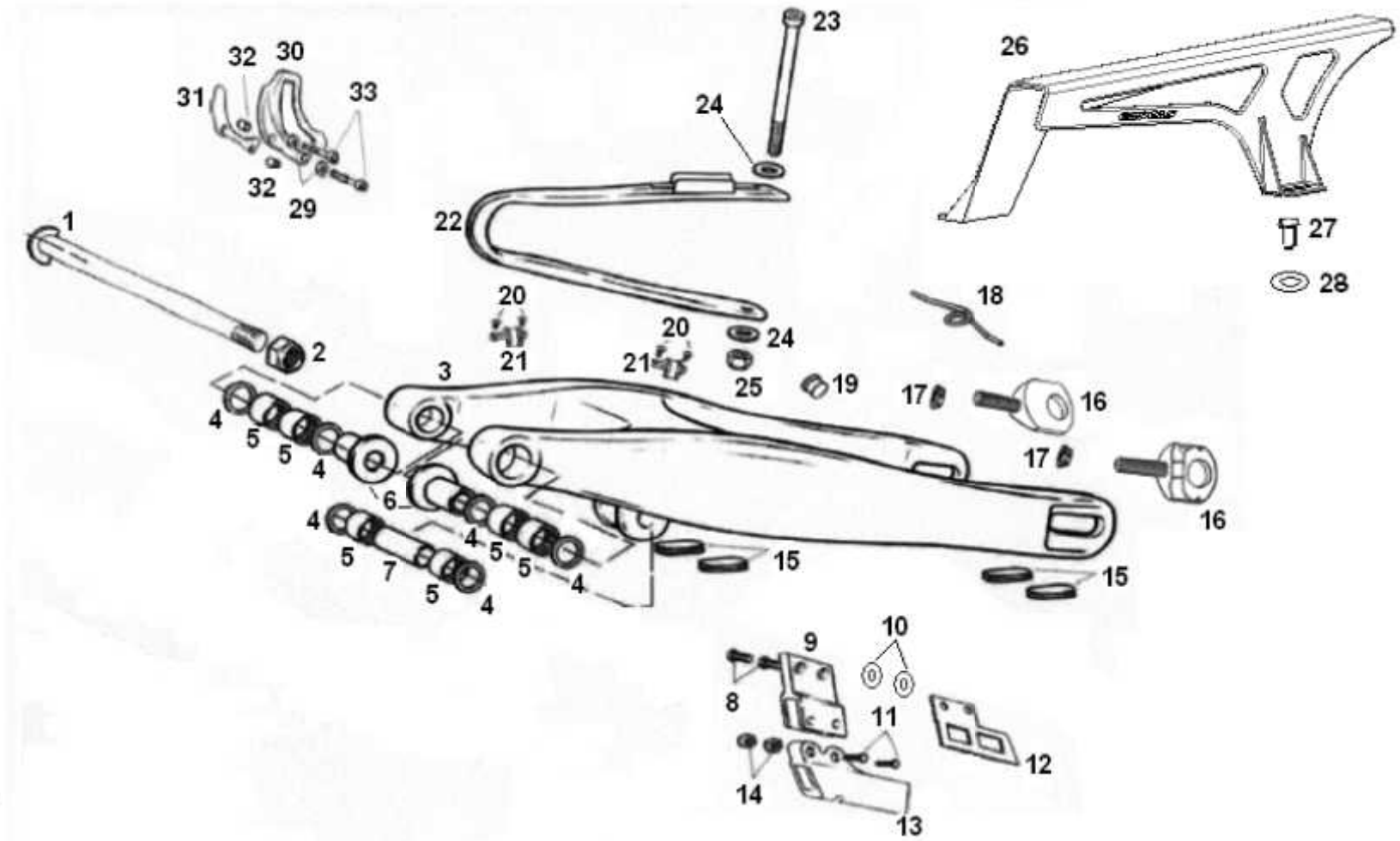
23
26
32
30
31
33
24
32
29
1
22
27
28
20
18
20
24
2
21
21
3
25
19
17
16
4
5
5
4
17
6
16
4
4
5
5
5
7
15
15
5
4
10
9
8
11
12
14
13

Nº	DESCRIPCION / DESCRIPTION	250		Cant
1	EJE BASCULANTE / SWINGARM AXLE	BE250312008		1
2	TUERCA / NUT	BE25612009		1
3	BASCULANTE / SWINGARM	BE250612002RC		1
4	TORICA 3.5X21 / O-RING 3.5X21	BE250510011		6
5	JAULA AGUJAS / NEEDLE BEARING	BE25614010		6
6	CASQUILLO BASCULANTE / SWINGARM BUSH	BE400012511		2
7	CASQUILLO 14X22X57 / BUSH 14X22X57	BE25612014		1
8	TORNILLO ALLEN 8X20 / ALLEN SCREW 8X20	T0308020		2
9	SOPORTE GUIA CADENA / CHAIN GUIDE SUPPORT	BC250221018		1
10	ARANDELA PLANA 6X12X1.5 / FLAT WASHER 6X12X1.5	T4006012		2
11	TORNILLO 6X45 / SCREW 6X45	T0206045		2
12	PLACA REF GUIA CADENA / REINFORCEMENT PLATE FOR CHAIN GUIDE	BC250412032		1
13	GUIA CADENA / CHAIN GUIDE	BE420002511		1
14	TUERCA AUTOBLOC. M-6 / SELF-LOCK NUT M-6	T2206002		2
15	GOMA PROTECTOR BASCULANTE / SWINGARM PROTECTION RUBBER	BE25836005		4
16	TENSOR RUEDA / WHEEL TENSOR	BE250418022		2
17	TUERCA / NUT	M01613001		2
18	MUELLE TENSOR RUEDA TRAS. / REAR WHEEL TENSOR SPRING	BE250718122		1
19	TAPON BASCULANTE / SWINGARM CAP	BE250436001		4
20	TORNILLO ULS 5X12 / ULS SCREW 5X12	T0505012		4
21	SUJ.LATIG.SOBRE BASC. / HOSE HOLDER	BE25612006		2
22	PATIN CADENA / CHAIN SLIDER	BE420502508		1
23	TORNILLO ALLEN 6 X 100 / ALLEN SCREW 6X100	T03060100		1
24	ARANDELA 6X18X1.5 / WHASER 6X18X1.5	T4006018		2
25	TUERCA AUTOBL. M-6 / SELF-LOCK NUT M-6	T2106002		1
26	PROTECTOR CADENA / CHAIN PROTECTION	BE250328011		1
27	TORNILLO ULS 6X16 / ULS SCREW 6X16	T0506016		1
28	DISTANCIADOR CUBRECADENA / CHAIN PROTECTOR SPACER	BE250720106		1
29	ARANDELA PLANA 6X12X1.5 / FLAT WASHER 6X12X1.5	T4006012		2
30	PROTECTOR PIÑON PLASTICO / SPROCKET PLASTIC PROTECTOR	BFS5486002510		1
31	PLATINA PROTECTOR PIÑON / SPROCKET PLATE PROTECTOR	ME25636021		1
32	CASQUILLO DISTANCIADOR PIÑON / SPROCKET SPACER BUSH	ME250036019		2
33	TORNILLO ALLEN 6x45 / ALLEN SCREW 6X45	T0306045		2

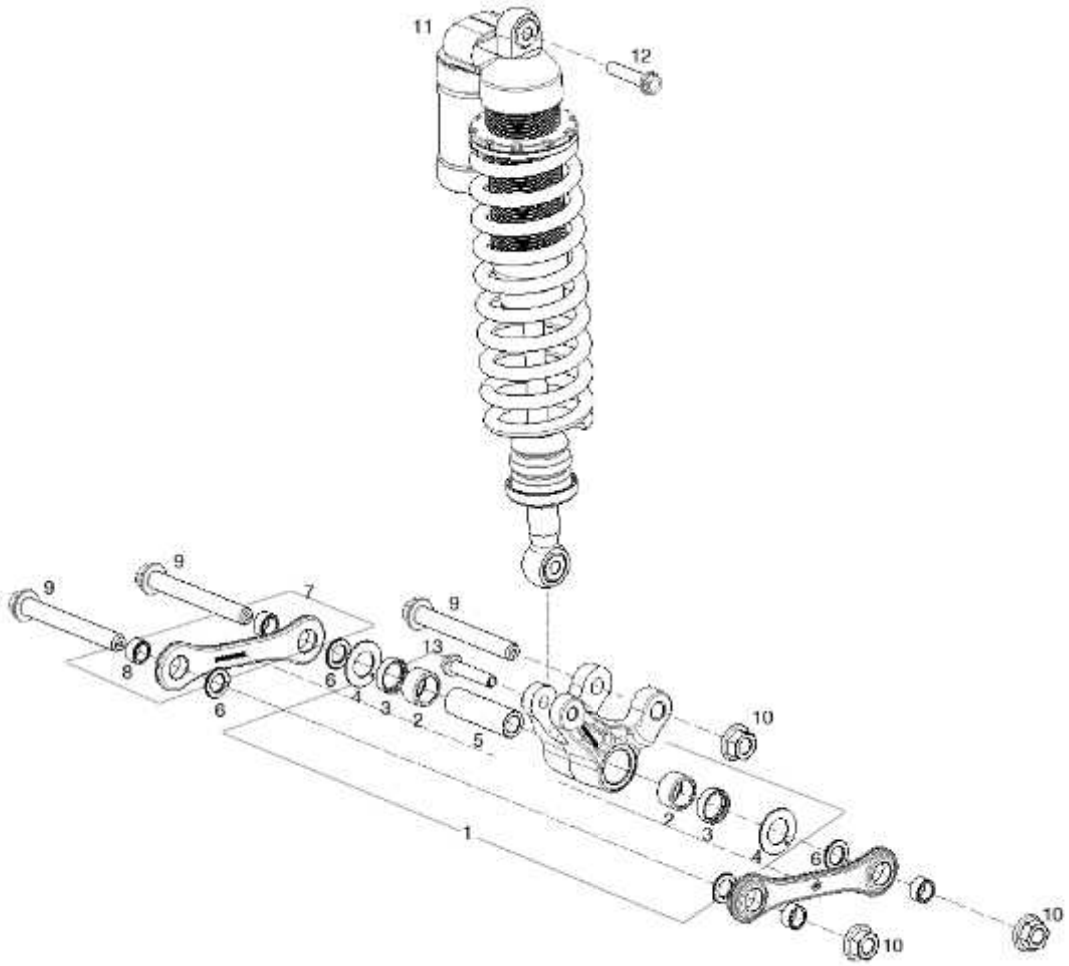
11
12
9
9
7
9
13
8
6
6
4
3
2
5
10
1
2
3
4
6
10
10

Nº	DESCRIPCION / DESCRIPTION	250		Cant
1	CTO.BALANCIN / ROCKER ARM ASSY	BE32000NCT3011		1
2	JAULA AGUJAS / NEEDLE BEARING	BE25614010		2
3	RETEN DIAM.28X22X8 / SEAL DIAM. 28X22X8	BE32025N3011		2
4	ARANDELA IGLIDUR G / IGLIDUR G WASHER	T4003822		2
5	EJE / SHAFT	BE32020N3011		1
6	ARANDELA 15X25X2.5 / WASHER 15X25X2.5	T4015025		4
7	CTO. BIELETA / CONNECTING ROD ASSY	BE34000NCT3011		2
8	CASQUILLO BIELETA / CONNECTING ROD BUSH	BE25642002		4
9	TORNILLO M14X110 / SCREW M14X110	T0214110R		3
10	TUERCA / NUT	BE25612009		3
11	AMORTIGUADOR ÖHLINS / ÖHLINS SHOCK	BF300002513		1
12	TORNILLO M10X45 / SCREW M10X45	T0210045		1
13	TORNILLO M10X40 / SCREW M10X40	T0110042		1

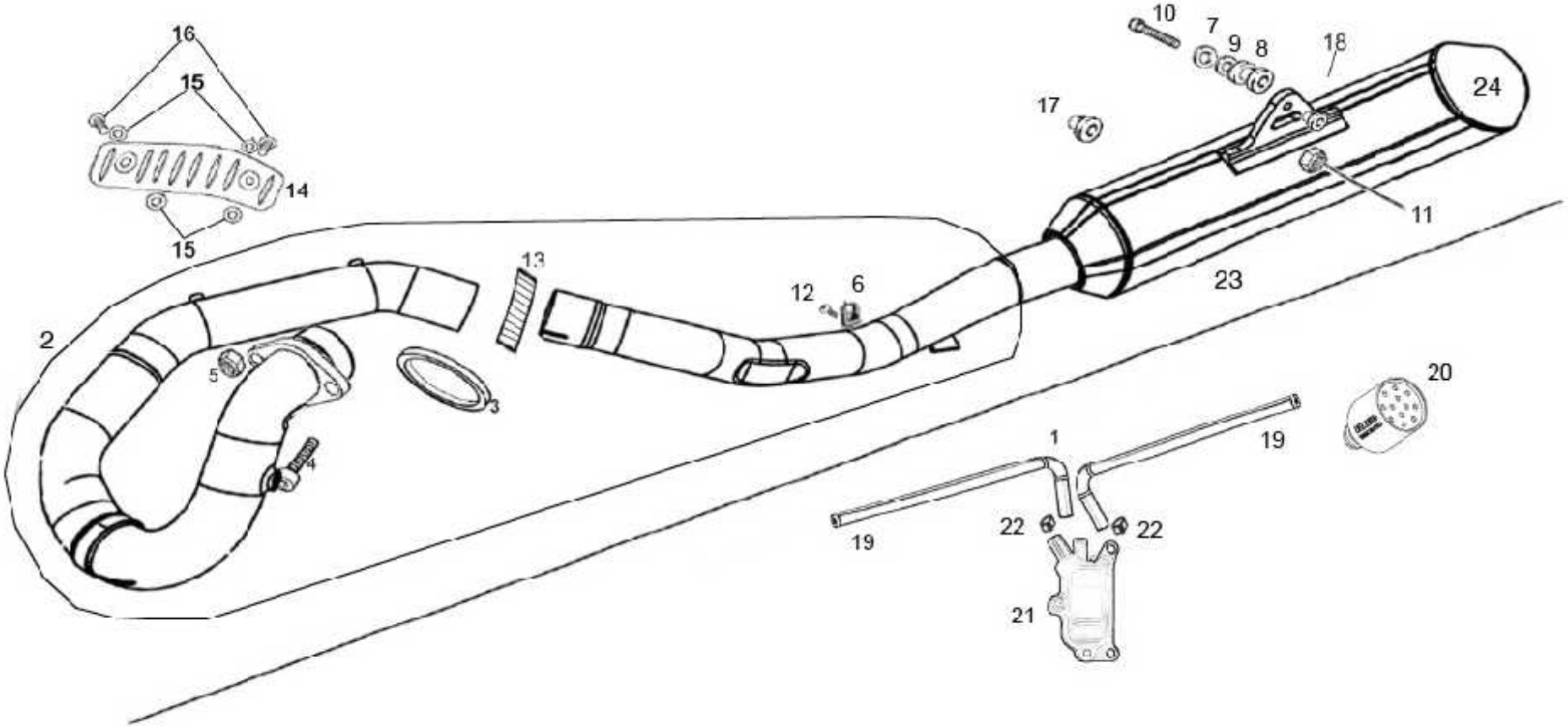
16
15
14
15
2
5
4
3
13
12
6
10
7
9
8
18
24
17
11
23
20
1
19
19
22
22
21

Nº	DESCRIPCION / DESCRIPTION	250		Cant
1	CTO. ESCAPE-SILENCIOSO EC 250 4T 2010/	BFS85001CT2510		1
2	CURVA ESCAPE / CURVE ESCAPES	BFS850012510		1
3	JUNTA ESCAPE	5NL1461300		1
4	ALLEN 8X20	T0308020		1
5	TUERCA M8 BAJA AUTOBL. ARAND / NUT M8 AUTBL. WASHER	M120116031		1
6	GRAPA NUT M8 / NUT M 8	BT280010041		1
7	ARANDELA 8X16X1.5 / 8X16X1.5 WASHER	T4008016		1
8	GOMA SILENBLOCK / SILENBLOCK RUBBER	BFS870504508		1
9	ARANDELA BOMBADA SILENBLOCK / SILENBLOCK WASHER	BQ450726270		1
10	ALLEN 8X45	T0308045		1
11	TUERCA M8 ALTA CON ARAND. AUTOBL. / NUT M8 AUTOBL. WASHER	T2208002		1
12	ULS 8X20	T0508020		1
13	ABRAZADERA DIAM. 42 / CLAMP DIAM. 42	BFS862102510		1
14	PROTECTOR ESCAPE / EXHAUST PROTECTOR	BFS450526021		1
15	ARANDELA GLASMIDE / GLASMIDE WASHER	T4006715		4
16	ULS CON ARAND. 6X12 / ULS WASHER 6X12	T0556012		2
17	GOMA PROTECTOR PORTANUMEROS / PROTECTIVE RUBBER PORTHOLE NUMBERS	BFS925504510		1
18	CASQUILLO SILENBLOCK / SILENBLOCK SOCKET	BFS870554508		1
19	TUBO GOMA VALVULA / TUBE RUBBER VALVE	BE785551209		2
20	FILTRO AIRE / VALVE FILTER AIR	BT280626059		1
21	VALVULA AIS / AIS VALVE	BE785652509		1
22	ABRAZADERA 14 / 14 CLAMP	MFS450410031		2
23	SILENCIOSO FINAL EC 200 4T	BFS870012510		1
24	TAPÓN RESTRICCIÓN DE GASES	BFS870022510		1

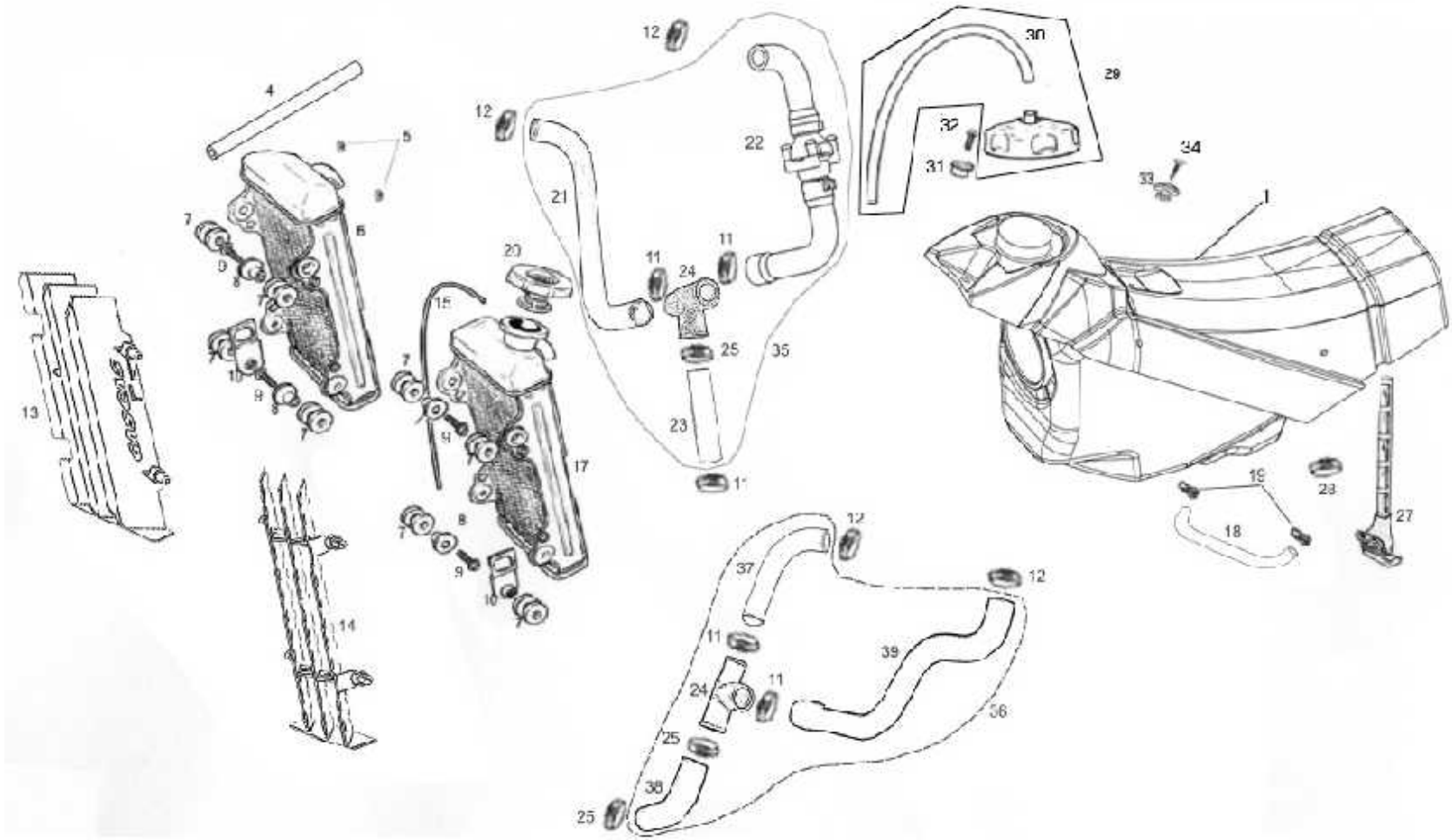
12
30
29
4
12
22
32
34
5
31
33
21
1
7
6
20
11
11
24
15
25
35
13
9
23
17
19
28
18
27
8
9
37
12
12
14
11
39
24
11
36
25
38
25

Nº	DESCRIPCION / DESCRIPTION	250		Cant
1	DEPÓSITO GASOLINA / FUEL TANK	BFS760002510		1
4	TUBO INTERCONEXIÓN RADIADORES	BE713002511		1
5	ABRAZADERA MUELLE / SPRING CLAMP	MFS400110031		2
6	RADIADOR DERECHO / RIGHT RADIATOR	BFS700012510		1
7	SILENTBLOCK RADIADOR / RADIATOR SILENTBLOC	BIE500132031		8
8	CASQUILLO INF. SUJ. RADIADOR / LOWER RADIATOR HOLDER BUSHING	BE25832040		4
9	TORN. ALLEN 6X20 / 6X20 SCREW ALLEN	T0306020		4
10	PLASTICO LATERAL RADIADOR /RADIATING LATERAL PLASTIC	BE25632015		2
11	ABRAZADERA COBRA 23 / CLAMP 23	L200041		5
12	ABRAZADERA COBRA 22 / CLAMP 22	L200038		4
13	REJILLA RADIADOR DRCH / RIGHT RADIATING GRID	BE730502510		1
14	REJILLA RADIADOR IZQ. / LEFT RADIATING GRID	BE730602510		1
15	TUBO SOBRANTE /LEFTOVER TUBE	BE25632009		1
17	RADIADOR IZQUIERDO / LEFT RADIATOR	BFS450732001		1
18	TUBO GASOLINA / TUBE FUEL	BF75000014512		1
19	ABRAZADERA MUELLE / CLAMP WARF	BE250210047		2
20	TAPON RADIADOR 1.8 / RADIATING PLUG	BFS701504509		1
21	TUBO SUPERIOR DERECHO / TUBE RIGHT SUPERIOR	BFS710502510		1
22	TUBO SUPERIOR IZQ. / TUBE LEFT SUPERIOR	BFS710602511		1
23	TUBO INFERIOR /	BFS710852510		1
24	BIFURCACION / BIFURCATION	BFS711002510		2
25	ABRAZADERA COBRA 26 / CLAMP 26	BE120132051		3
27	GRIFO GASOLINA / FAUCET FUEL	BPS400510031		1
28	ABRAZADERA COBRA 17 / CLAMP 17	BIT50010033		1
29	TAPON GASOLINA / DIPOSIT PLUG	BE250520010CT		1
30	TUBO DESVAPORIZADOR /DESVAPORIZER TUBBE	BT280310018		1
31	CASQUILLO DEPOSITO / SOCKET DIPOSIT	BE25610007		1
32	TORNILLO DEPOSITO / SCREW DIPOSIT	T0606020		1
33	CASQUILLO SILLIN / SOCKET SEAT	BIE050210007		1
34	TORNIILLO ROSCA / SCREWW	T0610001		1
35	CTO. TUBO CULATA A RADIADOR / JOINT TUBE BUTT	BFS71200CT2511		1

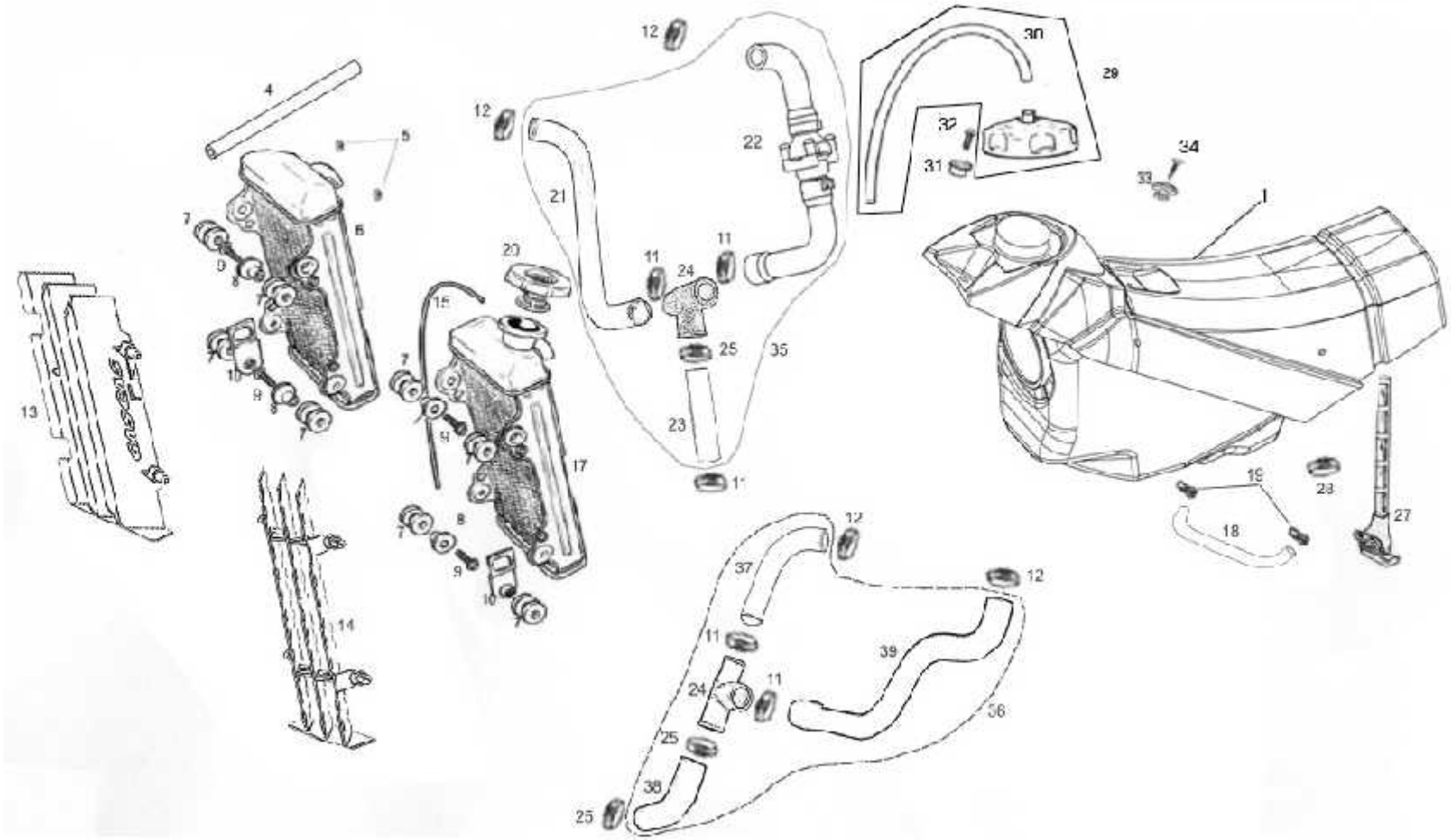
12
4
5
6
7
9
10
8
13
14
15
20
17
12
21
22
11
24
25
35
23
1
30
29
32
31
34
33
1
19
28
18
27
12
37
12
11
39
24
11
36
25
38
25

Nº	DESCRIPCION / DESCRIPTION	250		Cant
36	CTO. TUBO BOMBA AGUA / JOINT TUBE PUMP WATER	BFS71050CT2510		1
37	TUBO SUPERIOR BOMBA AGUA / TUBE SUPERIOR PUMP WATER	BFS710102510		1
38	TUBO INFERIOR BOMBA AGUA / TUBE INF. PUMP WATER	BFS710002510		1
39	TUBO LATERAL BOMBA AGUA / TUBE LATERAL PUMP WATER	BFS710202510		1

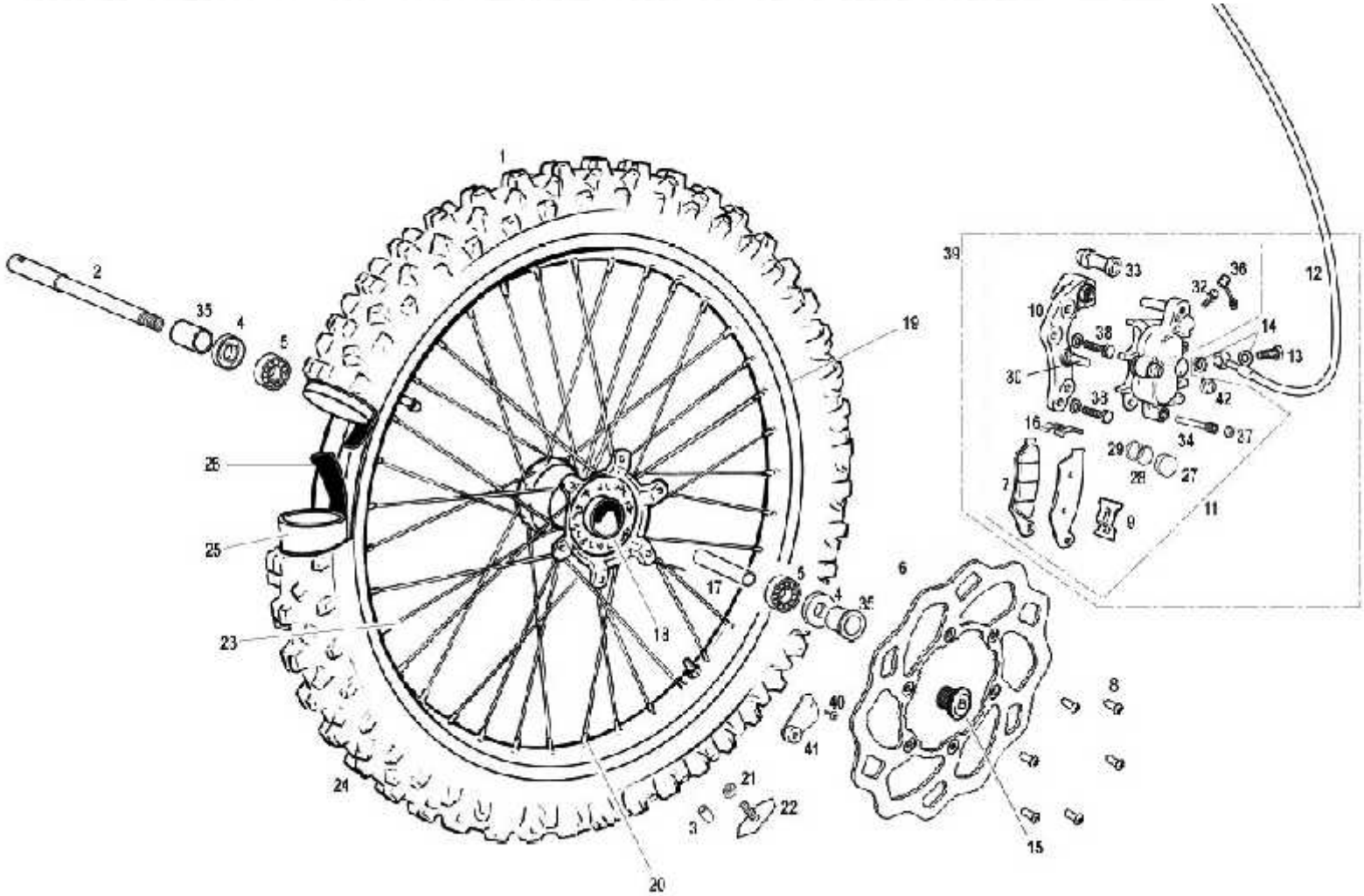
1
2
35
4
5
19
26
25
23
24
20
17
18
6
8
15
40
41
21
22
39
33
36
32
12
10
38
14
13
30
42
33
16
34
27
29
28
27
7
9
11

Nº	DESCRIPCION / DESCRIPTION	250		Cant.
1	RUEDA DELANTERA / FRONT WHEEL	BE50000CT2510		1
2	EJE RUEDA DELANTERA / FRONT WHEEL AXIS	BC250718017		1
3	CASQUILLO AGARRE CUBIERTA DELANTERA / FRONT TIRE HOLDING BUSHING	BE555102510		1
4	RETÉN CUBO DELANTERO 30X42X7 / 30X42X7 FRONT WHEEL GASKET	BE250418057		2
5	COJINETE 6905 2RSR / BEARING	ME120136055		2
6	DISCO FRENO DELANTERO / FRONT BRAKE DISC	BE520002509		1
7	PASTILLAS DE FRENO DELANTERO / FRONT BRAKE PADS	BE620652508		1
8	ULS TORK 6X14 / SCREW 6X12	T0566014		6
9	PLATINA (A) SUJ. PASTILLAS DEL. / FRONT BRAKE PADS HOLDER BRACKET (A)	BE620112508		1
10	SOPORTE PINZA DELANTERO / FRONT CALIPER SUPPORT	BE620102508		1
11	PINZA FRENO DELANT. / FRONT BRAKE CALIPER	BE250722000		1
12	LATIGUILLO FRENO DELANTERO / FRONT BRAKE HOSE	BE250422002		1
13	RACORD SUJ. LATIGUILLO 10X1,25 / HOSE HOLDER RACORD 10X1.25	BC25722006		1
14	ARANDELA LATIGUILLO 10X14X1 / HOSE WASHER 10X14X1	BE25622007		2
15	TORNILLO EJE RUEDA DELANTERA / FRONT WHEEL AXIS BOLT	BE250718026		1
16	PLATINA (B) SUJ. PASTILLAS DELANT. / FRONT BRAKE PADS HOLDER BRACKET (B)	BE620122508		1
17	DISTANCIADOR / SPACER	BE250418058		1
18	CUBO RUEDA DELANTERO SEP. INT. ALUM. / FRONT WHEEL HUB	BE250418007		1
19	LLANTA 1,60X21 / RIM 1.60X21	BE54001R2509		1
19A	CTO. LLANTA DELANTERA RADIADA / RIM WITH SPOKES ASSY	BE54001RCT2509		1
20	TUERCA RADIO DELANTERO / FRONT SPOKE NUT	BE250218010		36
21	TUERCA AUTOBLOCANTE M8 BAJA / M8 NUT SELF-LOCKING LOWER	T2108001		1
22	AGARRE CUBIERTA DELANTERA / FRONT TIRE HOLDER	BE505002509		1
23	RADIO DELANTERO 243X3,5 / FRONT SPOKE 243X3.5	BE542002508		36
24	NEUMÁTICO DELANTERO 90/90-21 / FRONT TIRE 90/90-21	BE501002511		1
25	CÁMARA DELANTERA / FRONT AIR HOSE	BE502002511		1
26	PROTECTOR BANDA DELANTERA / FRONT RIM BAND	BE503002511		1
27	KIT REPARACIÓN PISTONES / PISTON REPARATION SET	BE620422508		4
32	KIT SANGRADOR / BLEEDER SET	BE620602508		1
33	PROTEC. TORNILLO PINZA FRENO DEL. / FRONT BRAKE CALIPER BOLT PROT.	BE620682508		1
35	CASQUILLO RUEDA DELANTERA / FRONT WHEEL BUSHING	BC250418019		2
39	CTO. FRENO DELANTERO PURGADO / FRONT BRAKE SET	BE250422108		1
40	SEGGER DIAM 9	BE520602510		1
41	IMAN DE BOTON / BUTTON MAGNET	BP120734008CT		1
42	GUARDAPOLVO / DUST COVER	BE620692508		1

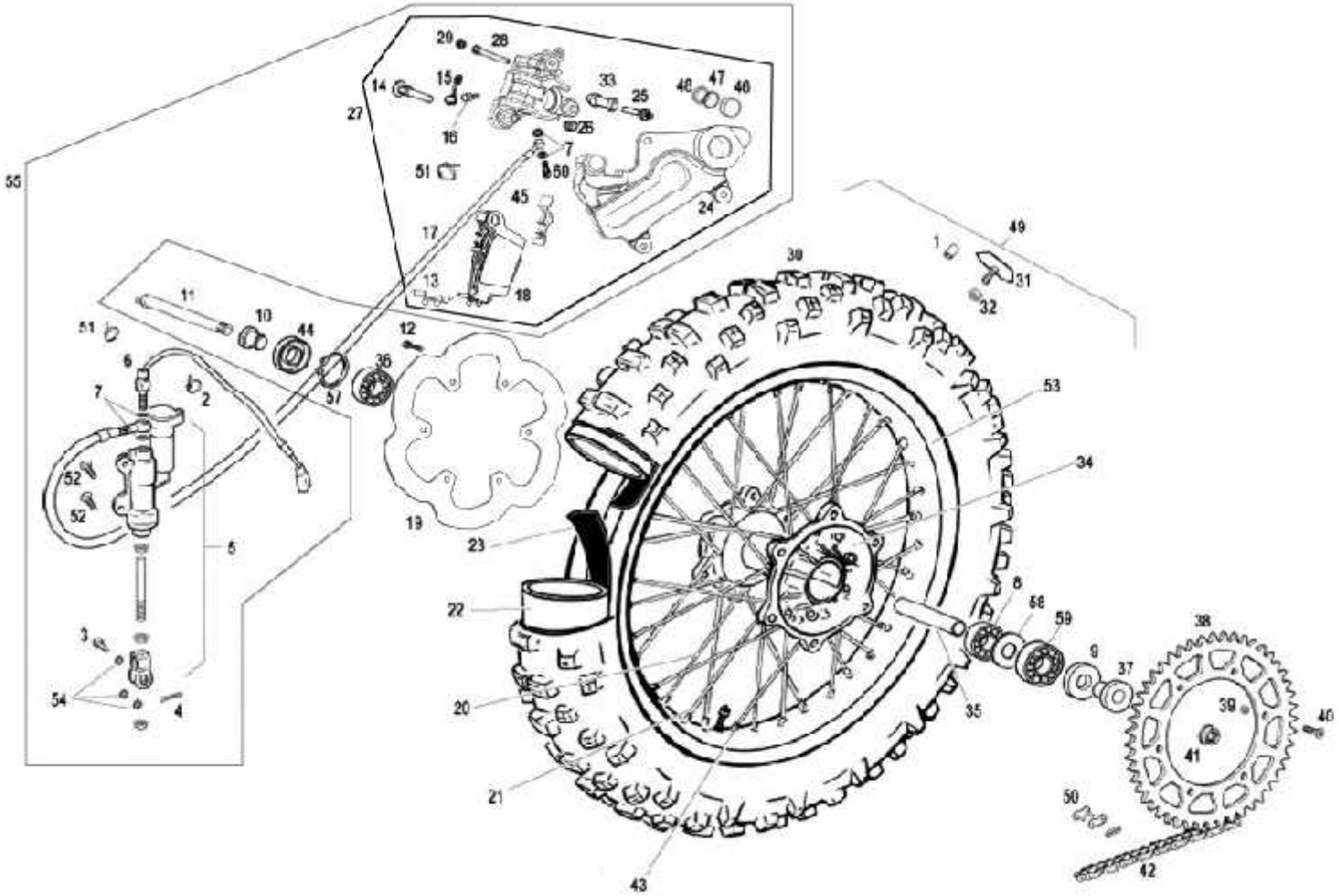
29
28
14
15
33
25
46
47
48
27
16
26
7
51
50
45
24
55
17
13
18
49
1
31
32
39
11
10
44
12
51
6
36
57
7
2
53
34
52
52
19
23
5
22
8
58
59
38
3
9
37
54
4
20
35
39
40
41
21
50
42
43

Nº	DESCRIPCION / DESCRIPTION	250		Cant
1	CASQUILLO AGARRE CUBIERTA DELANTERA / FRONT TIRE HOLDING BUSHING	BE250518048		1
2	BRIDA UNEX 2244 16/102 4.8X36 / CLAMP 2244 16/102 4.8X36	BE25634007		1
3	PASADOR 8X20 PEDAL FRENO / BRAKE PEDAL PIN 8X20	BE25622026		1
4	CLAVILLA PASADOR FRENO 2X20 / BRAKE PEDAL PIN STOPPER	BE25622027		1
5	BOMBA FRENO TRASERO NISSIN / NISSIN REAR BRAKE PUMP	BE660002509		1
6	INTERRUPTOR STOP BOMBA NISSIN / NISSIN BRAKE PUMP STOP SWITCH	BE250334003		1
7	ARANDELA LATIGUILLO 10X14X1 / HOSE WASHER 10X14X1	BE25622007		4
8	COJINETE 6204 2RSR / BEARING 6204 2RSR	C180700		1
9	RETÉN RUEDA TRASERA / REAR WHEEL SEAL	BE250318055		1
10	DISTANCIADOR RUEDA TRASERA CORTO / SHORT REAR WHEEL SPACER	BE250018025		1
11	EJE RUEDA TRASERA / REAR WHEEL AXIS	BE25618020		1
12	TORNILLO HEXAGONAL 6X16 DISCO TRAS. / R. DISC BRAKE HEX. SCREW 6X16	T0206014		6
13	PLATINA (A) SUJ. PASTILLAS TRAS. / REAR BRAKE PADS HOLDER BRACKET (A)	BE250022090		1
14	TORNILLO SUJECIÓN PINZA / CALIPER HOLDER SCREW	BE250022096		1
15	TAPÓN SANGRADOR / BLEEDER CAP	BE250022055		1
16	SANGRADOR / BLEEDER	BE250022060		1
17	LATIGUILLO FRENO TRASERO NISSIN / NISSIN REAR BRAKE HOSE	BE661002509		1
18	PASTILLAS DE FRENO TRASERO / REAR BRAKE PADS	BE250022068		1
18A	PASTILLAS DE FRENO TRASERO NISSIN / NISSIN REAR BRAKE PADS	BE250422068		1
18B	PASTILLAS DE FRENO TRASERO NISSIN / NISSIN REAR BRAKE PADS	BE675002509		1
19	DISCO FRENO TRASERO / REAR BRAKE DISC	BE570002509		1
20	RADIO 192X4,5 LADO FRENO 18” / 18” BRAKE-SIDE SPOKE 192X4.5	BE250018015		18
21	RADIO 188X4,5 LADO CORONA 18” / 18” SPROCKET-SIDE SPOKE 188X4.5	BE250018014		18
22	CAMARA TRASERA 18 CR / REAR AIR HOSE 18 CR	BE552002511		1
23	PROTECTOR BANDA TRASERA 18 / REAR RIM BAND	BE553002511		1
24	SOPORTE PINZA TRASERA / REAR CALIPER SUPPORT	BE671002509		1
25	TORNILLO CLAVIJA PINZA FRENO / BRAKE CALIPER BOLT	BE250022034		1
26	GUARDAPOLVO / DUST COVER	BE675802509		1
27	PINZA FRENO TRASERO / REAR BRAKE CALIPER	BE250322001		1
28	PASADOR PASTILLAS / BRAKE PADS PIN	BE250022094		1
29	PROTECCIÓN PASADOR / PIN PROTECTION	BE250022095		1
30	NEUMÁTICO TRASERO 140/80-18 / REAR TYRE 140/80-18	BE551002511		1
31	AGARRE CUBIERTA TRASERA / REAR TYRE HOLDER	BE555002509		1

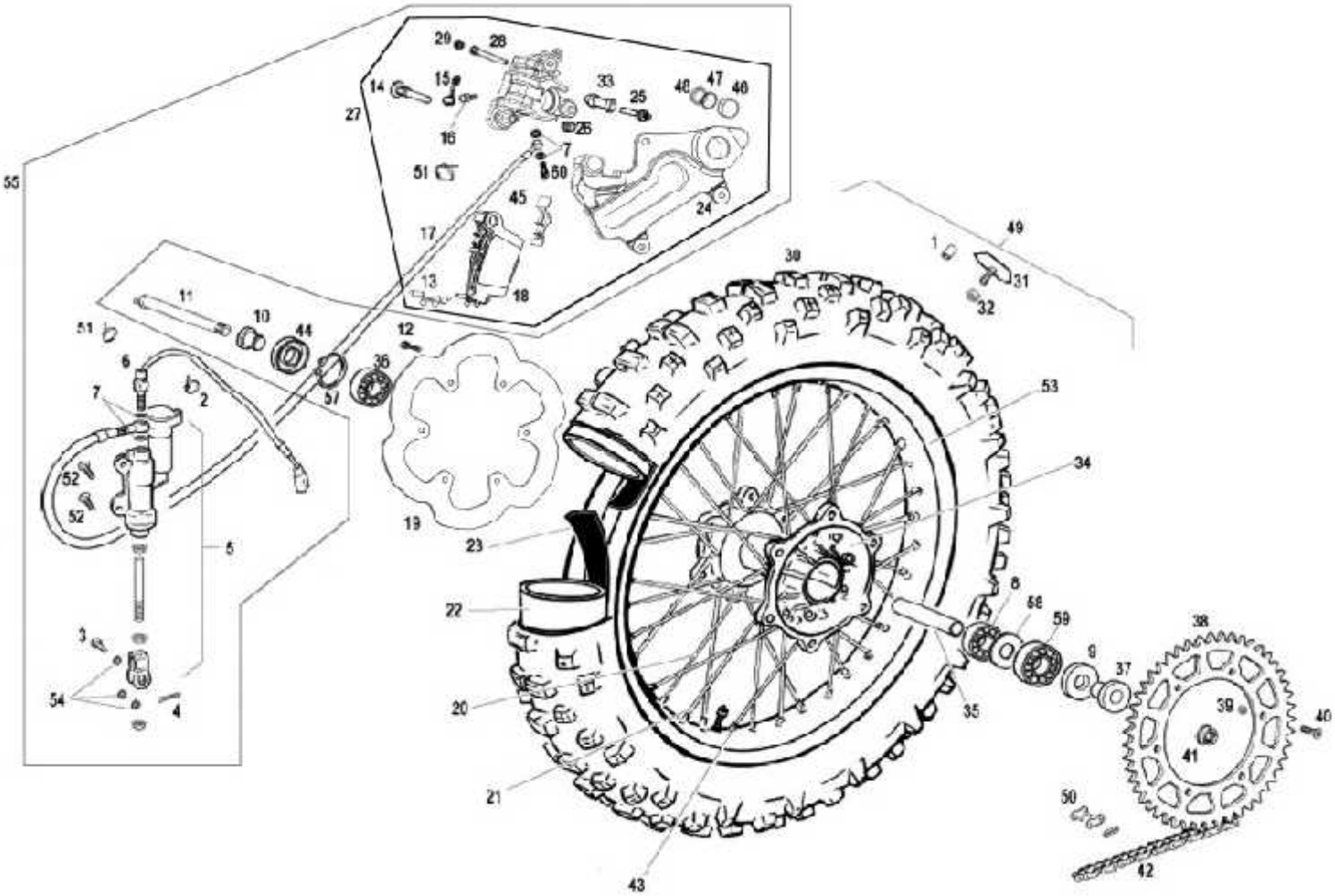
20
28
14
15
33
25
46
47
40
27
16
26
7
51
50
45
24
17
13
18
55
49
1
31
32
30
11
10
44
12
51
36
57
6
7
2
52
52
53
34
19
23
5
22
8
58
59
9
37
38
3
54
4
20
35
39
40
41
21
50
42
43

Nº	DESCRIPCION / DESCRIPTION	250		Cant
32	TUERCA AUTOBLOCANTE M8 BAJA / SELF-LOCKING NUT M8	T2108001		1
33	PROTECTOR TORNILLO / SCREW PROTECTOR	BE250022039		1
34	CUBO RUEDA TRASERA / REAR WHEEL HUB	BE250318027		1
35	DISTANCIADOR RUEDA TRASERA INTE. / REAR WHEEL SPACER	R575700		1
36	COJINETE 6004 2RSR / BEARING 6004 2RSR	C160001		1
37	DISTANCIADOR RUEDA DELANTERA LARGO / LONG WHEEL SPACER	BE250318021		1
38	CORONA COLOR TITANIO 48	BE55000013012		1
39	TUERCA AUTOBLOCANTE M8 ALTA / HIGH SELF-LOCKING SPROCKET NUT M8	T2208002		6
40	ALLEN CÓNICO 8X30 / CONIC ALLEN BOLT 8X30	T0408030		6
41	TUERCA AUTOBLOCANTE RUEDA TRASERA / REAR WHEEL SELF-LOCKING NUT	BE25618023		1
42	CADENA REGINA / REGINA CHAIN	BE250310036		1
43	TUERCA RADIO TRASERO / REAR SPOKE NUT	BE250018016		36
44	RETÉN / SEAL	C160710		1
45	PLATINA (B) SUJ. PAST. TRASERAS / REAR BRAKE PADS HOLDER BRACKET (B)	BE250022091		2
46	PISTÓN PINZA FRENO TRASERO / REAR BRAKE CALIPER PISTON	BE675602509		2
47	RETÉN PISTÓN PINZA FRENO TRASERO / REAR BRAKE CALIPER PISTON O'RING	BE675502509		2
48	TÓRICA PISTÓN PINZA FRENO TRASERO / REAR BRAKE CALIPER PISTON SEAL	BE250022048		2
49	RUEDA TRASERA / REAR WHEEL SET	BE55000CT2510		1
50	ENGANCHE CADENA / CHAIN SPLIT LINK	BE250310066		1
51	BRIDA UNEX CORTA / SHORT CLAMP	BE25634010		3
52	ULS 6X20 CON ARANDELA PLATA / 6X20 ULS WITH WASHER	T0556020		2
53	LLANTA 2.15X18 / RIM 2.15X18	BE59001R2509		1
54	ARANDELA 8X16X1 / 8X16X1 WASHER	T4008018		3
55	CTO. FRENO TRASERO / REAR BRAKE SET	BE65000CT2509		1
56	CASQUILLO SEPARADOR BOMBA FRENO TRASERO / SPACER BRAKE BUSHING	BT120222097		1
57	SEEGER DIÁMETRO 42 / 42 DIAMETER SEEGER	BE25618038		1
58	ARANDELA INTERIOR CUBO / INTERIOR HUB WASHER	BE250318056		1
59	COJINETE RUEDA 6005-25R1 C3 / WHEEL BEARING	BE250318054		1
60	RACORD SUJ. LATIGUILLO 10X1,25 / HOSE HOLDER RACORD 10X1.25	BC25722006		1

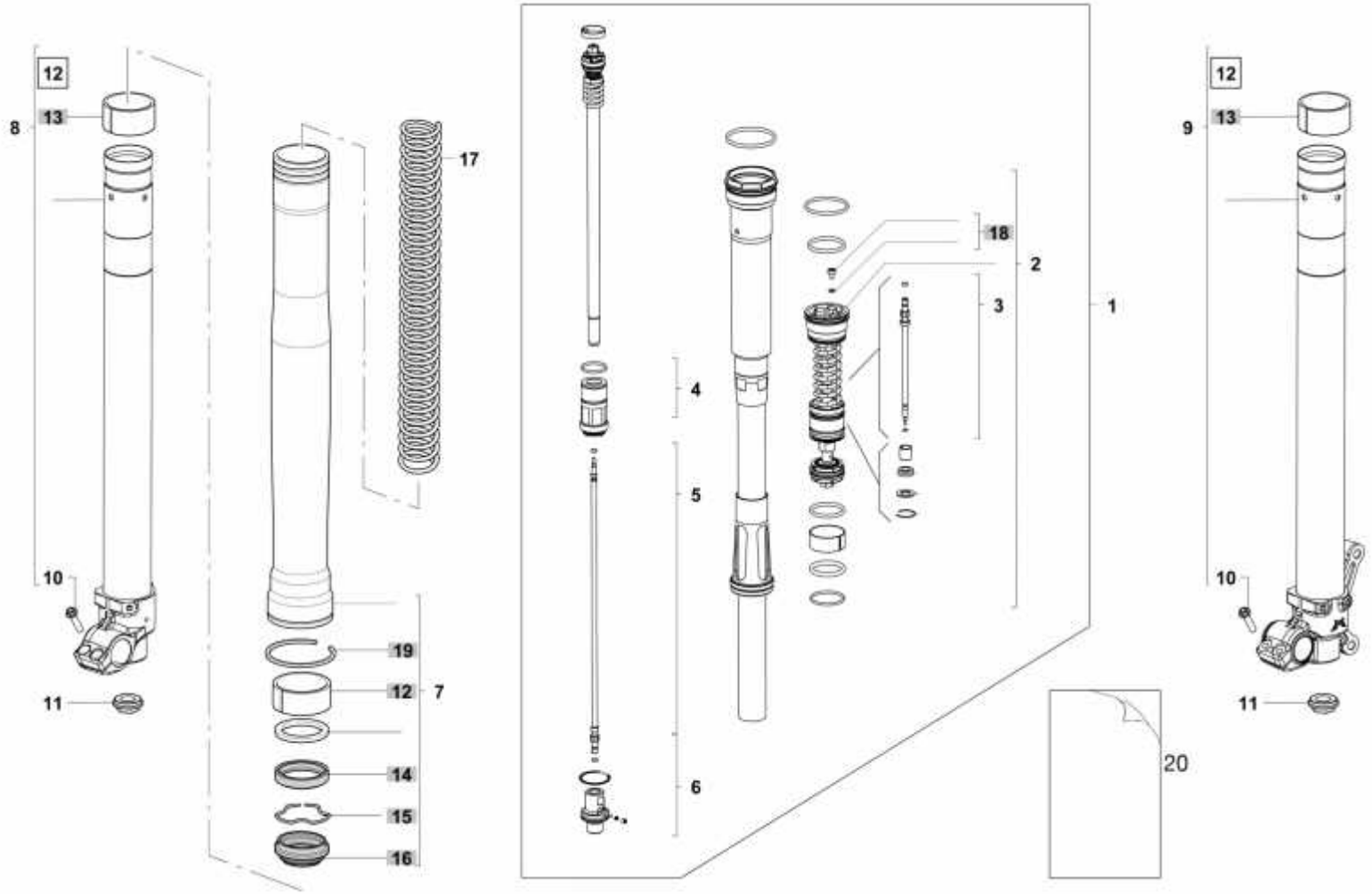
12
13
8
10
11
17
19
12
7
14
15
16
4
5
6
18
2
3
1
20
12
13
9
10
11

Nº	DESCRIPCION / DESCRIPTION	250		Cant
0	SUSPENSIÓN DELANTERA MZ48 CON CARTUCHO CERRADO / FRONT SUSPENSION MZ48 WITH CLOSED CARTRIDGE	BF200002513		1
1	CARTUCHO COMPETO / COMPLETE CARTRIDGE UNIT	8032082/P		2
2	VÁLVULA DE COMPRESIÓN / COMPRESSION VALVE UNIT	717214/P		2
3	VARILLA VÁLVULA DE COMPRESIÓN / COMPRESSION INNER ROD	5561131/P		2
4	CASQUILLO / PILOT BOSS	804425/R		2
5	VARLLA SISTEMA EXTENSIÓN / EXTENSION INNER ROD	5561127/P		2
6	UNIDAD DE AJUSTE REBOTE / REBOUND ADJUSTER UNIT	810146>A		2
7	BOTELLA / OUTER TUBE UNIT	760204LA/C		2
8	BARRA Y PIE DERECHO / R.H STANCHION +DROP OUT UNIT	819578/R		1
9	BARRA Y PIE IZQUIERDO / I.H. STANCHION +DROP OUT UNIT	819579/R		1
10	TORNILLO / SCREW	520497PN/P		4
11	TUERCA DE FIJACIÓN / FIXING NUT	521257CH/P		2
12	CASQUILLO SUPERIOR / UPPER BUSHING	538174/P		2
13	CASQUILLO INFERIOR / LOWER BUSHING	538173/P		2
14	KIT RETÉN DE ACEITE D48 USD / KIT OIL SEAL D48 USD	8501639/C		1
15	ANILLO / STOP RING	523414/P		2
16	RETÉN DE POLVO / DUST SEAL	533340/P		2
17	KIT MUELLES ø 48 - K= 4,20 / SPRINGS KIT USD ø 48 - K= 4,20	8501645/C		1
18	TORNILLO + TÓRICA / SCREW + O RING UNIT	850208AR/R		2
19	ANILLO / RING	523329/P		2
20	ADHESIVO MARZOCCHI M	8501676/4		
100	KIT RETENES / KIT OIL SEAL D.48USD	8501639/C		
101	KIT CASQUILLOS / KIT BUSHING D.48USD	8501640/C		
102	KIT REPARACIÓN VÁLVULA COMPRESIÓN / KIT COMPRESSION SERVICE D.48USD	8501641/C		
103	KIT REPARACIÓN SIST.REBOTE / KIT REBOUND SERVICE D.48USD	8501642/C		
111	KIT ARANDELAS 0,10 (DE 11 A 23MM) / SHIMS KIT 0,10 (FROM 11 TO 23 MM)	850788/C		
112	KIT ARANDELAS 0,15 (DE 11 A 23 MM) / SHIMS KIT 0,15 (FROM 11 TO 23 MM)	850789/C		
113	KIT ARANDELAS 0,20 (DE 11 A 23 MM) / SHIMS KIT 0,20 (FROM 11 TO 23 MM)	850790/C		
114	KIT ARANDELAS 0,30 / SHIMS KIT 0,30	850791/C		
116	KIT ARANDELAS 0,10 (DE 24 A 32 MM) / SHIMS KIT 0,10 (FROM 24 TO 32 MM)	8501643/C		
117	KIT ARANDELAS 0,15 (DE 24 A 32 MM) / SHIMS KIT 0,15 (FROM 24 TO 32 MM)	8501644/C		
121	EXTRACTOR TAPÓN / REMOVE CAP D.48USD	R5294AA/P		
122	EXTRACTOR VÁLVULA DE COMPRESIÓN / REMOVE COMPRESSION VALVE D.48USD	R5295KR/P		
123	HTA. MONTAJE RETÉN ACEITE / OIL SEAL INTRODUCER D.48USD	R5296KR/P		

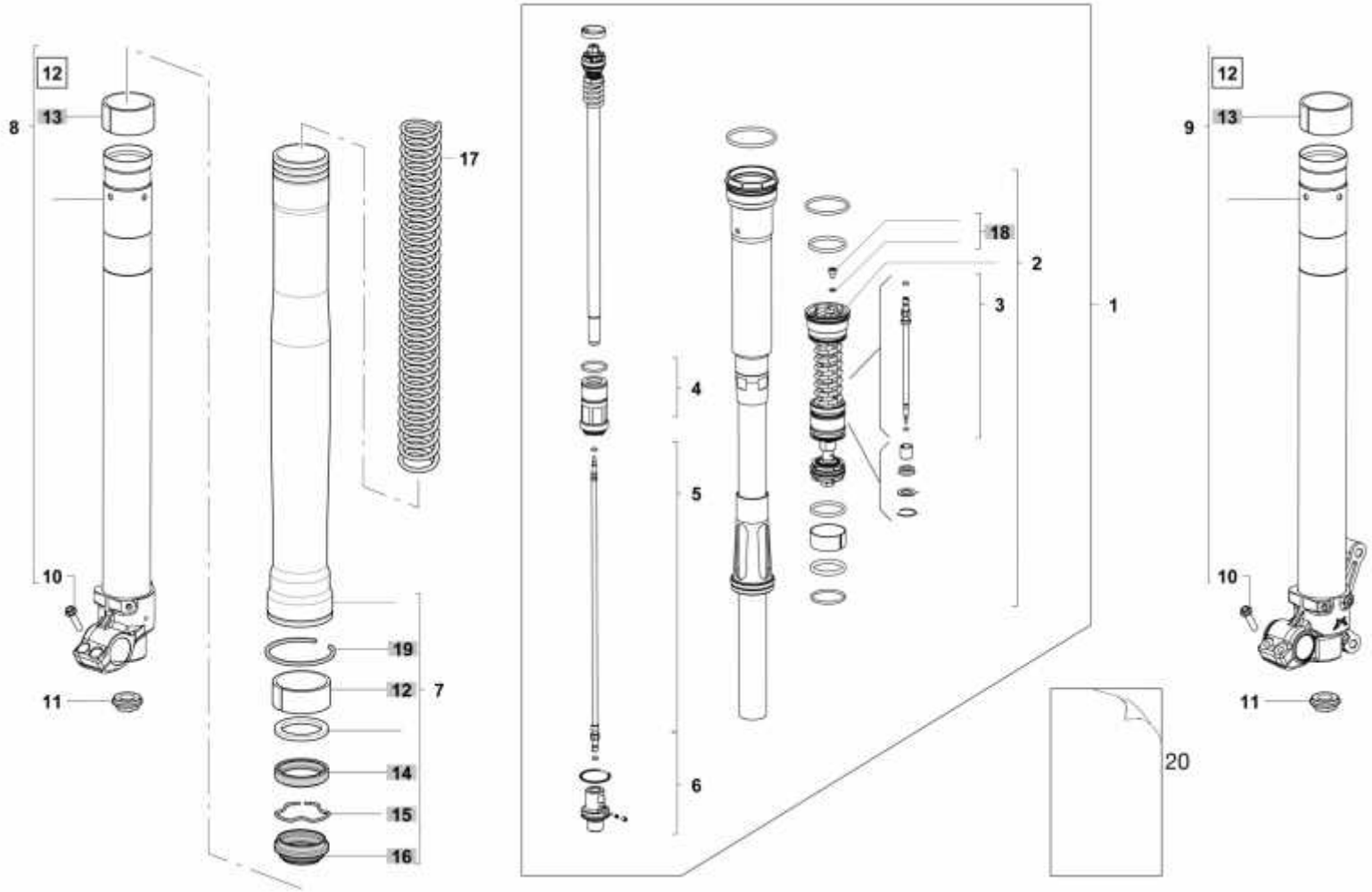
12
13
8
10
11
17
19
12
7
14
15
16
18
2
3
1
4
5
6
20
12
13
9
10
11

Nº	DESCRIPCION / DESCRIPTION	250		Cant
124	MORDAZA 10-12-28 / JAW 10-12-28 D.48USD	R5297KR/P		
	KIT MUELLES ø 48 - K= 4,00 / SPRINGS KIT USD ø 48 - K= 4,00	8501646/C		
	KIT MUELLES ø 48 - K= 4,40 / SPRINGS KIT USD ø 48 - K= 4,40	8501647/C		
	KIT MUELLES ø 48 - K= 4,60 / SPRINGS KIT USD ø 48 - K= 4,60	8501648/C		
	KIT MUELLES ø 48 - K= 4,80 / SPRINGS KIT USD ø 48 - K= 4,80	8501649/C		
	KIT MUELLES ø 48 - K= 5,00 / SPRINGS KIT USD ø 48 - K= 5,00	8501650/C		