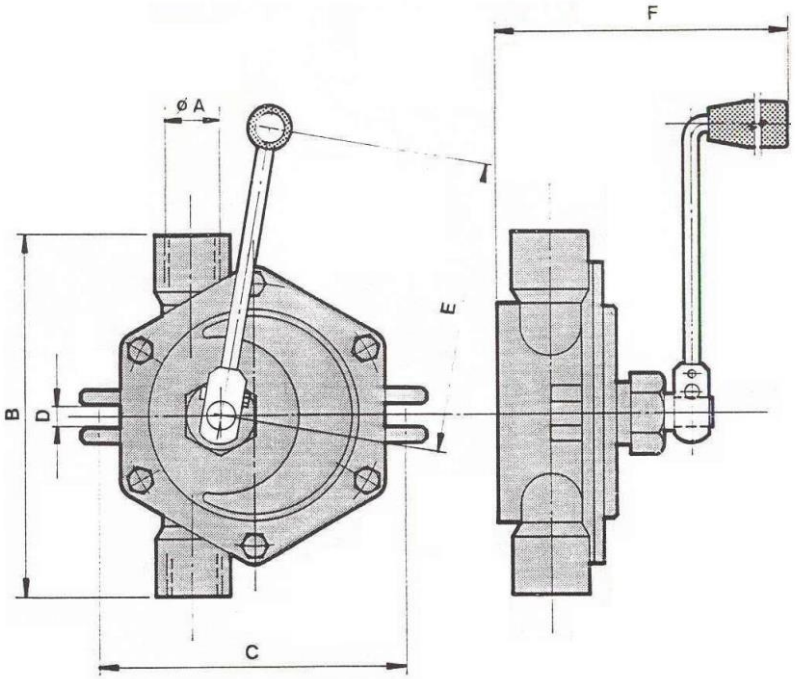

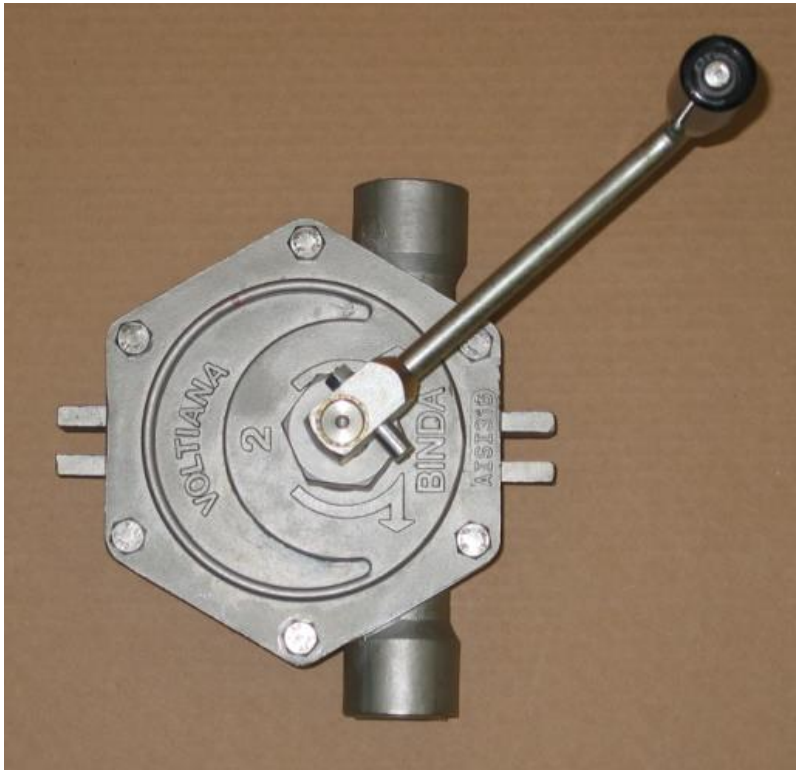

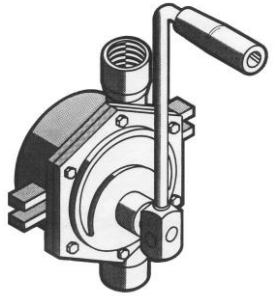

TYPE	Φ A	B	C	D	E	F	FLOW RATE [lt/min]	WEIGHT [kg]	H in [m]	H out [m]
V2 INOX	1"	200	170	11	165	170	40	5,5	6	40

INOX: Wetted parts stainless steel and Teflon.
Suitable for acids, solvents and edible fluids.

OFFICINA MECCANICA BINDA s.r.l.
COSTRUZIONE POMPE E RIDUTTORI
22032 ALBESE CON CASSANO (COMO) Italia - Via Pramergè, 4
Tel. 0039-031.200.144 - Fax 0039-031.360.255